SUSANVILLE INDIAN RANCHERIA

ROAD CONSTRUCTION PROJECT

PLANS FOR RECONSTRUCTION AND CONSTRUCTION OF SPRING RIDGE ROAD

PROJECT NO.: 515018

SUSANVILLE INDIAN RANCHERIA LASSEN COUNTY, CALIFORNIA

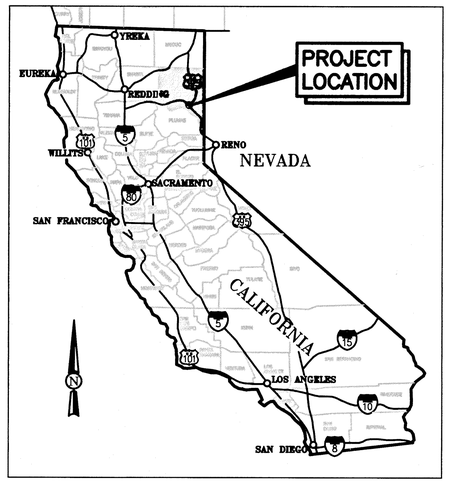

LOCATION MAP
NTS

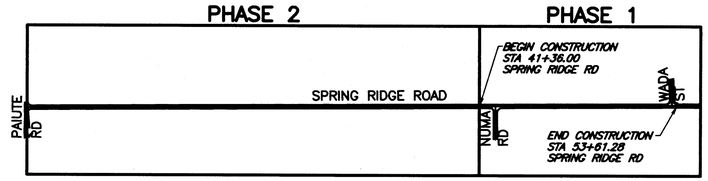

VICINITY MAP - SUSANVILLE
NTS

LENGTH OF PROJECT			
ROAD	STATION TO STATION	TYPE	MILES
SPRING RIDGE ROAD	10+00 TO 41+25	NEW CONSTRUCTION	0.59
SPRING RIDGE ROAD	41+25 TO 53+61.28	RECONSTRUCTION	0.23
TOTAL			0.82

DESIGN CRITERIA	SPRING RIDGE ROAD
DESIGN SPEED	35 MPH
POSTED SPEED	35 MPH
MINIMUM RADIUS	N/A
MAXIMUM GRADIENT	8%
MIN STOPPING SIGHT DISTANCE	250'
CURRENT ADT (2010)	1000
PROJECTED ADT (2030)	1490
ROW WIDTH	67 FEET
MIN K-VALUE (CREST)	29
MIN K-VALUE (SAG)	49

INDEX OF SHEETS

SEQ	SHEET	TITLE
1	G-1	COVER
2	G-2	STANDARD ABBREVIATIONS AND LEGENDS
3	G-3	KEY MAP
4	G-4	GENERAL NOTES
5	G-5	SURVEY CONTROL DIAGRAM
6	C-1	TYPICAL SECTIONS
7	C-2	PLAN & PROFILE 10+00-21+00
8	C-3	PLAN & PROFILE 21+00-32+50
9	C-4	PLAN & PROFILE 32+50-44+00
10	C-5	PLAN & PROFILE 44+00-END
11	C-6	INTERSECTION RECONSTRUCTION DETAILS
12	C-7	DETAILS
13	C-8	CALTRANS STANDARD DETAILS
14	C-9	CALTRANS STANDARD DETAILS
15	C-10	CALTRANS STANDARD DETAILS
16	C-11	CALTRANS STANDARD DETAILS & PIPE BEDDING DETAILS

SHN ENGINEERS & GEOLOGIST, INC.

Eric Schneider
ERIC SCHNEIDER, PE
CERTIFICATE NO. 69219
2-29-2016
DATE

REGISTERED PROFESSIONAL ENGINEER ERIC ALLEN SCHNEIDER No. 69219 Exp. 6/30/16 CIVIL STATE OF CALIFORNIA

SUSANVILLE INDIAN RANCHERIA

SIGNATURE
3-1-16
DATE

SIGNATURE
3-1-16
DATE

VERIFY SCALES
BAR IS ONE INCH ON ORIGINAL DRAWING
0 1"
IF NOT ONE INCH ON THIS SHEET ADJUST SCALES ACCORDINGLY

SHN CONSULTING ENGINEERS & GEOLOGISTS, INC.
350 HARTNELL AVENUE REDDING, CA 96002
WWW.SHN-ENGR.COM 530-221-5424

NO.	DATE	REVISION	BY

DSGN EAS/DLY
DR DLY/NMD
CHK JSO
APVD

SUSANVILLE INDIAN RANCHERIA
SPRING RIDGE ROAD
SUSANVILLE, CALIFORNIA

COVER

SHEET G-1
SEQ 1
DATE 12/2015
PROJ. NO. 515018

SAVED: 2/29/2016 9:33 AM ESCHNEIDER, PLOTTED: 2/29/2016 9:36 AM ERIC SCHNEIDER
\\Eureka\Projects\CAD-FILES\Redding\2015\515018\515018-GEN-SHEETS.dwg

ABBREVIATIONS

A

ABS — ACRYLONITRILE–BUTADIENE–STYRENE
AB — ANCHOR BOLT, AGGREGATE BASE
AC — ASPHALTIC CONCRETE
ACP — ASBESTOS CEMENT PIPE
ACI — AMERICAN CONCRETE INSTITUTE
ADJ — ADJUSTABLE
AGGR — AGGREGATE
AISC — AMERICAN INSTITUTE OF STEEL CONSTRUCTION
AL — ALUMINUM
ALT — ALTERNATE
APPROX — APPROXIMATELY
ARCH — ARCHITECTURAL
ASTM — AMERICAN SOCIETY FOR TESTING & MATERIALS
AUTO — AUTOMATIC
AUX — AUXILIARY
@ — AT

B

BC — BEGIN CURVE
BCR — BEGIN CURB RETURN
BD — BOARD
BF — BLIND FLANGE
BFV — BUTTERFLY VALVE
BIA — BUREAU OF INDIAN AFFAIRS
BK — BOOK OR BACK
BLDG — BUILDING
BM — BENCH MARK, BEAM
BOT — BOTTOM
BRG — BEARING
BSW — BACK OF SIDEWALK
BTWN — BETWEEN
BV — BALL VALVE
BVC — BEGINNING OF VERTICAL CURVE
BW — BACK OF WALK

C

C — CHANNEL (STRUCTURAL SHAPE)
CATV — CABLE TELEVISION
CB — CATCH BASIN
CEIL — CEILING
CFM — CUBIC FEET PER MINUTE
CFS — CUBIC FEET PER SECOND
CHEM — CHEMICAL
CI — CAST IRON
CIP — CAST IRON PIPE
C.I.P. — CAST IN PLACE
CJ — CONSTRUCTION JOINT
CLR — CLEAR
℄ — CENTERLINE
CMP — CORRUGATED METAL PIPE
CMU — CONCRETE MASONRY UNIT
CR — CURB RETURN
CTSK — COUNTERSINK
CO — CLEANOUT, CONTRACTING OFFICER
COL — COLUMN
CONC — CONCRETE
CONT — CONTINUOUS OR CONTINUED
COORD — COORDINATE
COR — CONTRACTING OFFICERS REPRESENTATIVE
CPLG — COUPLING
CRS — COLD ROLLED STEEL
CTR — CENTER
CU — CUBIC
CU FT — CUBIC FEET
CV — CHECK VALVE
CW — COLD WATER
CY — CUBIC YARD

D

° — DEGREE (ANGLE)
d — PENNY (NAIL SIZE)
DB — DISTRIBUTION BOX
DBL — DOUBLE
DF — DOUGLAS FIR
DI — DROP INLET OR DUCTILE IRON
DIA — DIAMETER
DIAG — DIAGONAL
DIM — DIMENSION
DIMJ — DUCTILE IRON MECHANICAL JOINT
DIP — DUCTILE IRON PIPE
DET — DETAIL
DWG — DRAWING
D/W — DRIVEWAY

E

(E) — EXISTING
EA — EACH
EC — END CURVE
ECR — END CURB RETURN
EF — EACH FACE
EFL — EFFLUENT
EG — EXISTING GRADE
EL — ELBOW
ELEC — ELECTRIC OR ELECTRICAL
ELEV — ELEVATION
ENGR — ENGINEER
EP — EDGE OF PAVING
EQ — EQUAL
EQUIP — EQUIPMENT
ER — EDGE OF ROAD
EVC — END OF VERTICAL CURVE
EW — EACH WAY
EWEF — EACH WAY, EACH FACE
EXC — EXCAVATE
EXP — EXPOSED OR EXPANSION
EXP JT — EXPANSION JOINT
EXST — EXISTING
EXT — EXTERIOR

F

FC — FLEXIBLE COUPLING OR FACE OF CURB
FCA — FLANGED COUPLING ADAPTER
FD — FLOOR DRAIN
FDN — FOUNDATION
FF — FINISH FLOOR
FG — FINISHED GRADE
FH — FIRE HYDRANT
FIG — FIGURE
FIN — FINISH
FL — FLOW LINE
FLG — FLANGE
FLR — FLOOR
FLTR — FILTER
FOC — FACE OF CONCRETE
FT — FOOT OR FEET
FT2 — SQUARE FEET
FT3 — CUBIC FEET
FTG — FOOTING

G

G — GAS
GA — GAGE
GALV — GALVANIZED
GIP — GALVANIZED IRON PIPE
GPD — GALLONS PER DAY
GPH — GALLONS PER HOUR
GPM — GALLONS PER MINUTE
GRD — GRADE OR GROUND
GSP — GALVANIZED STEEL PIPE
GV — GATE VALVE
GYP — GYPSUM

H

HB — HOSE BIBB
HDR — HEADER
HDW — HARDWARE
HP — HORSEPOWER, HIGH POINT
HORIZ — HORIZONTAL
HR — HOUR
HT — HEIGHT
HW — HOT WATER
HWR — HOT WATER RETURN
HWS — HOT WATER SUPPLY

I

ID — INSIDE DIAMETER
IN — INCH
INFL — INFLUENT
INSUL — INSULATE OR INSULATION
INT — INTERIOR
INV — INVERT

J

JT — JOINT
JP — JOINT POLE

K

KIP — THOUSAND POUNDS
KW — KILOWATT

L

∠ — ANGLE (DEGREES)
L — ANGLE (STRUCTURAL SHAPE)
LB — POUND
LF — LINEAR FEET
LG — LONG
LH — LEFT HAND
LP — LOW POINT
LPG — LIQUIFIED PETROLEUM GAS
LR — LONG RADIUS
LT — LEFT
LONG — LONGITUDINAL

M

MATL — MATERIAL
MAX — MAXIMUM
MECH — MECHANICAL
MFR — MANUFACTURER
MGD — MILLION GALLONS PER DAY
MH — MANHOLE
MIN — MINIMUM OR MINUTE
MISC — MISCELLANEOUS
MJ — MECHANICAL JOINT
MTL — METAL
MUTCD — MANUAL ON UNIFORM TRAFFIC CONTROL DEVICES
MWS — MAXIMUM WATER SURFACE

N

(N) — NEW
NC — NORMALLY CLOSED
NIC — NOT IN CONTRACT
NF — NON–FREEZE
NO — NUMBER OR NORMALLY OPEN
NOM — NOMINAL
NPT — NATIONAL PIPE THREAD
NTS — NOT TO SCALE
— NUMBER

O

OC — ON CENTER
OD — OUTSIDE DIAMETER
OG — ORIGINAL GROUND
OVFL — OVERFLOW
OZ — OUNCE
OH — OVERHEAD

P

PC — POINT OF CURVE
PCF — POUNDS PER CUBIC FOOT
PE — PLAIN END
PERF — PERFORATED
PEP — POLYETHELENE PIPE
PI — POINT OF INTERSECTION
PL — PLATE
℄ — PROPERTY LINE
PLCS — PLACES
PLYWD — PLYWOOD
PMP — PERFORATED METAL PIPE
POC — POINT ON CURVE
PP — POWER POLE
PRC — POINT OF REVERSE CURVE
PREFAB — PREFABRICATED
PRELIM — PRELIMINARY
PRESS — PRESSURE
PROP — PROPERTY
PSF — POUNDS PER SQUARE FOOT
PSI — POUNDS PER SQUARE INCH
PSIG — POUNDS PER SQUARE INCH, GAUGE
PT — POINT OF TANGENCY, POINT
PV — PLUG VALVE
PVC — POLYVINYL CHLORIDE PLASTIC
PVMT — PAVEMENT

Q

QTY — QUANTITY

R

R — RADIUS
RCP — REINFORCED CONCRETE PIPE
RD — ROAD
RDCR — REDUCER
RWD — REDWOOD
REF — REFER OR REFERENCE
REINF — REINFORCED, REINFORCING OR REINFORCE
REQD — REQUIRED
RET — RETURN
RH — RIGHT HAND
RM — ROOM
RO — ROUGH OPENING
RSP — ROCK SLOPE PROTECTION
RT — RIGHT OR RING TIGHT
R/W — RIGHT OF WAY
RWL — RAIN WATER LEADER

S

S — SEWER
SL — SLOPE
SCHED — SCHEDULE
SD — STORM DRAIN
SECT — SECTION
SHLDR — SHOULDER
SHT — SHEET
SIM — SIMILAR
SP — SPACE OR SPACES
SPEC — SPECIFICATIONS
SQ — SQUARE
SQ FT — SQUARE FOOT
SQ IN — SQUARE INCH
SS — SANITARY SEWER
SST — STAINLESS STEEL
STA — STATION
STD — STANDARD
STL — STEEL
STR — STRUCTURAL
STRUCT — STRUCTURE
SUSP — SUSPENDED
SWK — SIDEWALK
SYMM — SYMMETRICAL

T

TAN — TANGENT
T&B — TOP AND BOTTOM
T&G — TONGUE AND GROOVE
TBM — TEMPORARY BENCH MARK
TC — TOP OF CURB
TEL — TELEPHONE
TELEM — TELEMETRY
TEMP — TEMPERATURE OR TEMPORARY
THD — THREAD
TOC — TOP OF CONCRETE
TOG — TOP OF GRATE
TOW — TOP OF WALL
TP — TURNING POINT, TOP OF PAVEMENT OR TELEPHONE POLE
TRANSV — TRANSVERSE
TS — TUBE, STRUCTURAL
TYP — TYPICAL

U

UBC — UNIFORM BUILDING CODE
UOS — UNLESS OTHERWISE SPECIFIED
UG — UNDERGROUND
UTIL — UTILITY

V

V — VOLT
VAC — VACUUM
VC — VERTICAL CURVE
VCP — VITRIFIED CLAY PIPE
VERT — VERTICAL
VPI — VERTICAL POINT OF INTERSECTION

W

W — WATER OR WIDE FLANGE
W/ — WITH
W/O — WITHOUT
WP — WORK POINT
WS — WATER SURFACE, WATER STOP
WWF — WELDED WIRE FABRIC

X

XFMR — TRANSFORMER

Y

YD — YARD
YD2 — SQUARE YARD
YD3 — CUBIC YARD

NOTES

1. CONTACT THE ENGINEER FOR SYMBOLS NOT LISTED
2. THIS IS A STANDARD SHEET, THEREFORE, SOME SYMBOLS OR ABBREVIATIONS MAY APPEAR ON THIS SHEET WHICH DO NOT APPEAR ON THE PLANS.
3. SITE AND UTILITY SYMBOLS SHOWN ON THIS SHEET ARE NOT INTENDED TO REPRESENT THE PHYSICAL SCALE OR SHAPE OF ANY ITEMS. WHERE LARGE–SCALE PLANS ARE PRESENTED, THE SYMBOLS SHOWN HEREON MAY BE REPLACED BY DETAILS MORE SUITED TO THE DRAWING SCALE.

UTILITIES LEGEND

PROPOSED	EXISTING	
	⊗	GATE VALVE
	⊗ PV	PLUG VALVE
	⊗ BV	BALL VALVE
	⊗ BFV	BUTTERFLY VALVE
P	P	AUTOMATICALLY OPERATED VALVE (P= PNEUMATIC, E= ELECTRIC, S= SOLENOID, H= HYDRAULIC, D= DIAPHRAGM ACTUATOR)
		3–WAY VALVE
		GLOBE VALVE
		ANGLE VALVE
		PRESSURE REGULATING VALVE
		PRESSURE RELIEF VALVE
		CHECK VALVE
		AIR OR VACUUM RELEASE VALVE
AV	AV	AIR AND VACUUM VALVE
CA	CA	COMBINATION AIR VALVE
		FLOW METER
	NF	HOSE BIBB (NF= NON–FREEZE)
		REDUCER
		FIRE HYDRANT
		DROP INLET
		MANHOLE
		CLEANOUT
E	E	UNDERGROUND ELECTRICAL
OH E	OH E	OVERHEAD ELECTRICAL
TV	TV	CABLE TELEVISION
J	J	JOINT UTILITIES
TM	TM	UNDERGROUND TELEMETRY LINE
OH TM	OH TM	OVERHEAD TELEMETRY LINE
T	T	UNDERGROUND TELEPHONE LINE
OH T	OH T	OVERHEAD TELEPHONE LINE
W	W	WATER LINE
SS	SS	SANITARY SEWER LINE
SD	SD	STORM DRAIN LINE
G	G	GAS LINE
FM	FM	FORCE MAIN AND DIRECTION OF FLOW

SIZE AND MATERIAL OF EXISTING PIPING MAY BE SHOWN WHEN KNOWN.

SIZE AND MATERIAL OF NEW PIPING MAY BE SHOWN ON PLAN OR IN PROFILE.

		CULVERT
		POLE MOUNTED ROADWAY LUMINAIRE
	NOT USED	ITEM TO BE REMOVED
	NOT USED	ITEM TO BE ABANDONED IN PLACE
		WATER SERVICE
3	PB	PULL BOX AND DESIGNATION
R4–4		SIGN AND DESIGNATION

LINE DESIGNATION

2.0 — INDICATES LINE DESIGNATION
12 — INDICATES SHEET WHERE CONTINUATION OCCURS (REPLACED BY A LINE IF OCCURS ON SAME SHEET)

CURVE DATA

R (RADIUS)
L (LENGTH)
△ (DELTA)
T (TANGENT)

TOPOGRAPHIC LEGEND

PROPOSED	EXISTING	
		P.I. (POINT OF INTERSECTION)
NOT USED		TEMPORARY BENCH MARK
47.55	NOT USED	FINISH GRADE ELEVATON
NOT USED	42.6 X	ELEVATION OF ORIGINAL GROUND
		RADIAL POINT
		FLOW LINE AND DIRECTION
		TOP OF CUT
		TOP OF FILL
		TOE OF CUT OR FILL
200	180	CONTOUR LINE
		CONCRETE (IN PLAN)
		CONCRETE (IN SECTION)
		PAVEMENT
NOT USED		ROCKS
NOT USED		STUMPS
		TREES
		ROADS
	TP	UTILITY POLE (PP=POWER POLE, TP= TEL POLE, JP=JOINT POLE)
		GUY WIRE
		FENCE
		BOUNDARY LIMITS, W/DESIGNATION
		CENTERLINE
NOT USED		MARSH
		LAWN
NOT USED		SPRING
TP–4	TP–4	TEST PIT AND DESIGNATION
		EXPLORATION BORE HOLE
		PROPERTY CORNER
		SURVEY MONUMENT
		CONTROL POINT
		DRIVEWAY

DETAIL AND SECTION DESIGNATION

SECTION (LETTER) OR DETAIL (NUMERAL) DESIGNATION — A / 15

INDICATES SECTION OR DETAIL TAKEN AND SHOWN ON SAME SHEET

ON DRAWING WHERE SECTION OR DETAIL IS TAKEN:
SHEET NUMBER WHERE SHOWN

ON DRAWING WHERE SECTION OR DETAIL IS SHOWN:
SHEET NUMBER WHERE TAKEN

STANDARD DETAIL NUMBER (DETAIL MAY BE SHOWN ON ANY SHEET WITHIN THE DRAWING SET) — 006

2-29-16

REGISTERED PROFESSIONAL ENGINEER
ERIC ALLEN SCHNEIDER
No. 69219
Exp. 6/30/16
CIVIL
STATE OF CALIFORNIA

VERIFY SCALES
BAR IS ONE INCH ON ORIGINAL DRAWING 1"
IF NOT ONE INCH ON THIS SHEET, ADJUST SCALES ACCORDINGLY

CONSULTING ENGINEERS & GEOLOGISTS, INC.
350 HARTNELL AVENUE
REDDING, CA 96002
WWW.SHN-ENGR.COM
530-221-5424

NO.	DATE	REVISION	BY

DSGN DLY
DR NMD
CHK JSO
APVD

SUSANVILLE INDIAN RANCHERIA
SPRING RIDGE ROAD
SUSANVILLE, CALIFORNIA

STANDARD ABBREVIATIONS AND LEGENDS

SHEET G–2
SEQ 2
DATE 12/2015
PROJ. NO. 515018

SAVED: 2/9/2016 11:31 AM CNEWELL, PLOTTED: 2/9/2016 11:33 AM CHRIS D. NEWELL
\\EurekaSVRNEW\Projects\CAD–FILES\Redding\2015\515018\515018–GEN–SHEETS.dwg

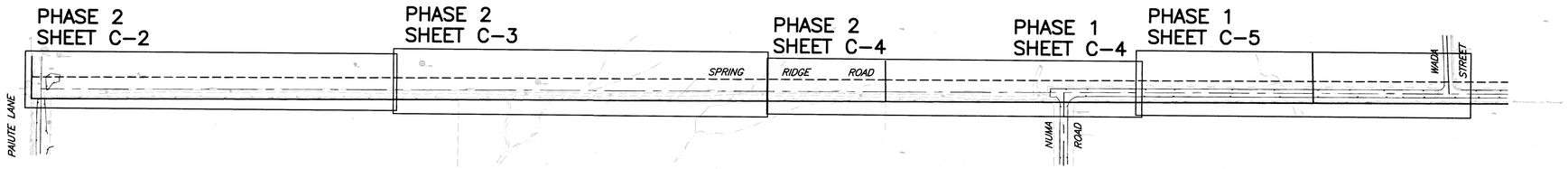

KEY MAP - SUSANVILLE

1"=200'

SAVED: 2/5/2016 12:00 PM NDOWNEY, PLOTTED: 2/8/2016 11:33 AM CHRIS D. NEWELL
\\Eureka\SHNEW\Projects\CAD-FILES\Redding\2015\515018\515018-KEY-MAP.dwg

VERIFY SCALES
BAR IS ONE INCH ON ORIGINAL DRAWING
0 1"
IF NOT ONE INCH ON THIS SHEET ADJUST SCALES ACCORDINGLY

CONSULTING ENGINEERS & GEOLOGISTS, INC.
350 HARTNELL AVENUE
REDDING, CA 96002
WWW.SHN-ENGR.COM
530-221-5424

NO.	DATE	REVISION	BY

DSGN DLY
DR NMD
CHK JSO
APVD

SUSANVILLE INDIAN RANCHERIA
SPRING RIDGE ROAD
SUSANVILLE, CALIFORNIA

KEY MAP

SHEET G-3
SEQ 3
DATE 12/2015
PROJ. NO. 515018

2-29-16
REGISTERED PROFESSIONAL ENGINEER
ERIC ALLEN SCHNEIDER
No. 69219
Exp. 6/30/16
CIVIL
STATE OF CALIFORNIA

NOTES:

GENERAL NOTES

1. ALL WORKMANSHIP AND MATERIALS SHALL CONFORM TO THE STANDARD SPECIFICATIONS FOR CONSTRUCTION OF ROADS AND BRIDGES ON FEDERAL HIGHWAY PROJECTS (FP-14 AND THE CONTRACT SPECIAL PROVISIONS FOR THIS PROJECT.
2. ALL PERMANENT AND TEMPORARY ROADSIDE SIGNS SHALL BE PLACED IN ACCORDANCE WITH THE MANUAL ON UNIFORM TRAFFIC CONTROL DEVICES (MUTCD) FOR STREETS AND HIGHWAYS (LATEST EDITION AND AMENDMENTS) AND IN ACCORDANCE WITH THE DETAILS IN THESE PLANS.
3. THE DESIGN FEATURES INCLUDING HORIZONTAL AND VERTICAL ALIGNMENTS, TYPICAL SECTIONS, APPROACHES, AND OTHER DESIGN DETAILS SHOWN ON THESE DESIGN PLANS SHALL NOT BE ALTERED OR MODIFIED IN ANY WAY DURING CONSTRUCTION WITHOUT THE EXPRESSED WRITTEN DIRECTION AND APPROVAL OF THE TRIBE. DRAINAGE STRUCTURES SHALL BE INSTALLED AS SHOWN ON THE PLANS WITH ONLY MINOR CORRECTIONS IN LOCATION SKEW AND/OR ELEVATIONS AS NEEDED TO FIT FIELD CONDITIONS AS DETERMINED BY THE TRIBE.
4. THE CONTRACTOR SHALL ASSUME FULL RESPONSIBILITY AND EXPENSE FOR DISPOSAL OF TRASH AND/OR CONSTRUCTION DEBRIS AND UNSUITABLE EXCAVATION MATERIAL IN ACCORDANCE WITH SECTIONS 107 AND 203 OF FP-14. THIS WORK SHALL BE INCIDENTAL OBLIGATIONS OF THE CONTRACTOR. THE CONTRACTOR SHALL READ AND MAKE CAREFUL EXAMINATION OF THE PLANS, SPECIFICATIONS, QUANTITIES AND MATERIAL ESTIMATES AND VISIT THE SITE OF THE PROPOSED CONSTRUCTION TO BECOME FAMILIAR WITH THE SITE CONDITIONS AND LIMITATIONS BEFORE MAKING A BID. THE CONTRACTOR SHALL BE RESPONSIBLE FOR ANY AND ALL ERRORS RESULTING FROM THE FAILURE TO MAKE SUCH EXAMINATION. ANY INFORMATION DERIVED FROM THE MAPS, PLANS, SPECIFICATIONS, PROFILES, DRAWINGS OR FROM THE ENGINEER WILL NOT RELIEVE THE CONTRACTOR FROM ANY RISK OR FROM FULFILLING THE TERMS OF THE CONTRACT.
5. NO WORK SHALL BE PERFORMED OUTSIDE OF THE DESIGNATED CONSTRUCTION LIMITS WITHOUT THE APPROVAL OF THE TRIBE. IN NO CASE SHALL ANY WORK BE PERFORMED OUTSIDE THE DESIGNATED RIGHT-OF-WAY OR CONSTRUCTION LIMITS WITHOUT WRITTEN APPROVAL FROM THE REGIONAL ROAD ENGINEER.
6. THE DETAILS SHOWN ON THE STANDARD EROSION CONTROL DRAWINGS ARE GENERAL DETAILS TO BE USED BY THE CONTRACTOR IN PREPARING A STORM WATER POLLUTION PREVENTION PLAN ALONG WITH THE REQUIREMENTS IN SECTION 157 OF THE CONTRACT SPECIAL PROVISIONS.
7. THE CONTRACTOR SHALL BE REQUIRED TO OBLITERATE ALL EXISTING ROADS WITHIN THE RIGHT-OF-WAY LIMITS AS CALLED FOR IN THESE PLANS. THIS WORK SHALL BE CONSIDERED UNDER THE EARTHWORK ITEMS REMOVAL OF ASPHALT AND AB.
8. THE CONTRACTOR SHALL REMOVE ALL EXISTING ROADSIDE SIGNS AT THE TIME NEW PERMANENT ROADSIDE SIGNS ARE INSTALLED OR IF THEY ARE IN THE WAY OF CONSTRUCTION. THE CONTRACTOR SHALL NOTIFY THE TRIBE AT LEAST THREE (3) WORKING DAYS IN ADVANCE OF SUCH SIGN REMOVAL.

GRADING

THE QUANTITIES SHOWN IN THE BIDLIST FOR EARTHWORK ARE APPROXIMATE. FINAL EARTHWORK QUANTITIES WILL BE DETERMINED BASED ON CROSS SECTIONS TAKEN BEFORE AND AFTER THE COMPLETION OF EARTHWORK. ANY BORROW MATERIAL CALLED FOR ON THE PLANS SHALL BE TAKEN FROM CONTRACTOR IDENTIFIED SOURCES OUTSIDE THE RIGHT-OF-WAY LIMITS. IT IS THE SOLE RESPONSIBILITY OF THE CONTRACTOR TO PROVIDE ANY NECESSARY BORROW MATERIAL FOR THIS PROJECT INCLUDING ALL NECESSARY PERMITS. ALL EXCAVATION, WASTE AND EMBANKMENT MATERIAL SHALL BE INCLUDED IN THE UNIT PRICE BID FOR THE EARTHWORK BID ITEMS SHOWN IN THE BID SCHEDULE. ANY REMOVED ASPHALT AND AB MATERIAL SHOWN ON THESE PLANS SHALL BE USED AS NECESSARY TO CONSTRUCT SUBGRADE AND AB AND MAY BE PLACED AS EMBANKMENT ALONG THE SHOULDERS AS DIRECTED BY THE TRIBE.

PIPE CULVERTS AND DRAINS

1. STRUCTURAL EXCAVATION AND BACKFILL (BEDDING MATERIAL, BACKFILL AGGREGATE AND/OR CONCRETE COVER AS BACKFILL) OF CULVERTS AND OTHER DRAINAGE STRUCTURES SHALL BE CONSIDERED INCIDENTAL TO INSTALLATION OF THE STRUCTURE. EXCESS MATERIAL REMOVED MAY BE USED TO REBUILD APPROACHES OR MAY BE PLACED ALONG ROADWAY SHOULDERS IN AREAS DESIGNATED AND/OR AS DIRECTED BY THE TRIBE.
2. THE CONTRACTOR AND TRIBE SHALL ADJUST THE LENGTHS OF PIPES TO MATCH FIELD CONDITIONS. THE CONTRACTOR SHALL PREPARE A REVISED PIPE LIST AND SUBMIT IT TO THE TRIBE FOR REVIEW AND APPROVAL BEFORE THE CONTRACTOR ORDERS ANY MATERIAL.
3. THE LOCATIONS OF PIPES MAY BE MODIFIED AS NECESSARY TO FIT ACTUAL FIELD CONDITIONS AS DETERMINED BY THE TRIBE.
4. EXISTING CULVERTS SHALL BE REMOVED, SALVAGED, AND STORED AS DIRECTED BY THE TRIBE, UNLESS OTHERWISE SPECIFIED.
5. GRATES FOR CURB DROP INLETS SHALL BE BICYCLE PROOF, PER 2010 CALTRANS STANDARD PLAN D77B, GRATE TYPE 24-12X

RIP RAP

1. ALL LOOSE RIP RAP SHALL BE PLACED WITH GEOTEXTILE FABRIC IN ACCORDANCE WITH THE SUPPLEMENTAL SPECIFICATIONS SECTION 251.

ALIGNMENT

THE TRIBE RESERVES THE RIGHT TO CHANGE THE ALIGNMENT OR ANY OTHER CHANGE TO THE PROJECT AS NEEDED AND DETERMINED BY THE BIA AND TO ADJUST THE QUANTITIES OF CONTRACT ITEMS ACCORDINGLY. NO CONTRACT UNIT PRICE WILL BE ADJUSTED OR COMPENSATION WILL BE MADE DUE TO CHANGE OF THE ALIGNMENT OR ANY OTHER CHANGES.

DRIVEWAY OR APPROACH ROADS

1. ALL APPROACH ROADS AND DRIVEWAYS SHALL EITHER BE CONSTRUCTED, REBUILT AND/OR RESHAPED OR REMOVED UP TO THE R/W LIMITS AS SHOWN IN THE PLANS AND PAVED TO THE R/W LIMITS AS REQUIRED, EXCEPT WHERE NOTED OTHERWISE. THIS WORK SHALL BE INCLUDED IN THE UNIT PRICE BID FOR THE APPROPRIATE EARTHWORK AND PAVING BID ITEMS SHOWN IN THE BID SCHEDULE.
2. THE LOCATION AND NUMBER OF DRIVEWAYS IS APPROXIMATE AND MAY BE CHANGED BY THE TRIBE.
3. IF THE BID SCHEDULE DOES NOT CONTAIN PAY ITEMS FOR CONSTRUCTION OF DRIVEWAYS, APPROACHES OR OTHER ROADS INTERSECTING THE MAIN ROAD, THIS WORK WILL BE CONSIDERED INCIDENTAL TO OTHER ITEMS OF WORK AND NO DIRECT PAYMENT WILL BE MADE.

DITCHES OR CATCH BASINS

ALL FURROW DITCHES AND DRAINAGE DITCHES SHALL BE STAKED AND GRADED TO DRAIN TO THE LIMITS OF THE RIGHT-OF-WAY. DITCH BLOCKS, DIKES AND DITCHES MAY BE ADDED AT LOCATIONS DESIGNATED BY THE TRIBE AND/OR AS SHOWN ON THESE PLANS. ALL DITCH BLOCKS, DIKES AND FURROW DITCHES SHALL BE PAID FOR UNDER THE APPROPRIATE BID ITEMS FOR THIS WORK AS SHOWN ON THE BID SCHEDULE.

SAW CUTTING

THE CONTRACTOR SHALL BE REQUIRED TO SAW CUT THE EXISTING ASPHALT PAVEMENT WHERE OLD ASPHALT IS TO TIE INTO THE NEW ASPHALT PAVEMENT. THE CONTRACTOR SHALL BE REQUIRED TO TAPER THE NEW ASPHALT CONCRETE SURFACING TO MATCH THE EXISTING PAVEMENT SECTION AT TIE-IN POINTS AND TO PROVIDE FOR A SMOOTH TRANSITION AS DIRECTED BY THE TRIBE. THIS WORK SHALL BE INCIDENTAL TO THE PAVING ITEMS SHOWN.

SIGNING, STRIPING AND TRAFFIC CONTROL

ALL WORK PERTAINING TO SIGNING, PAVEMENT MARKINGS AND TRAFFIC CONTROL SHALL CONFORM TO THE CURRENT EDITION OF MUTCD.

FENCES

1. ANY FENCING REMOVED DURING CONSTRUCTION OPERATIONS SHALL BE REPLACED WITH NEW FENCING AS DIRECTED BY THE TRIBE. THIS WORK IS CONSIDERED INCIDENTAL TO THE PROJECT AND NO DIRECT PAYMENT WILL BE MADE. NEW FENCING SHALL BE OF THE SAME TYPE & QUALITY OF THE EXISTING FENCE.
2. EXISTING FENCING SHALL REMAIN IN PLACE AND UNDISTURBED BY CONSTRUCTION OPERATIONS UNLESS OTHERWISE SHOWN ON PLANS.

QUANTITIES

QUANTITIES OF ITEMS, LENGTH OF PROJECT, AND SITE CONDITIONS SHOWN IN THE PLANS ARE APPROXIMATE.

SEEDING, MULCHING & FERTILIZER

1. ALL NEWLY GRADED AREAS WITHIN THE PROJECT LIMITS ARE TO BE SEEDED. THE PERMANENT SEED MIXTURE SHALL BE AS DIRECTED IN THE CONTRACT SPECIAL PROVISIONS.
2. AFTER SEEDING, A MULCH CONSISTING OF GRASS, HAY OR STRAW SHALL BE BLOWN ON AND PUNCHED INTO ALL NEWLY SEEDED AREAS OF PERMANENT SEEDING. ESTIMATES OF QUANTITIES FOR GRASS, HAY OR STRAW ARE BASED ON ASSUMED COVERAGE OF ALL NEWLY SEEDED AREAS AT A RATE OF TWO TONS PER ACRE.

UTILITIES

1. THE LOCATION OF UTILITIES SHOWN IN THE PLANS IS APPROXIMATE AND IS ONLY SHOWN TO ASSIST THE CONTRACTOR IN COMPLETING THE WORK. THE CONTRACTOR SHALL VERIFY ALL UTILITIES WITH THE OWNERS PRIOR TO CONSTRUCTION. ANY DAMAGE TO EXISTING UTILITIES THROUGH THE NEGLIGENCE OF THE CONTRACTOR SHALL BE RESTORED TO THEIR ORIGINAL CONDITION AT THE CONTRACTOR'S EXPENSE.
2. NO COMPENSATION WILL BE MADE FOR DELAY OF CONSTRUCTION AND/OR COMPENSATION FOR DEMOBILIZATION AND REMOBILIZATION.

2-29-16

REGISTERED PROFESSIONAL ENGINEER
ERIC ALLEN SPRINGER
No. 69219
Exp. 6/30/16
CIVIL
STATE OF CALIFORNIA

VERIFY SCALES
BAR IS ONE INCH ON ORIGINAL DRAWING
0 1"
IF NOT ONE INCH ON THIS SHEET, ADJUST SCALES ACCORDINGLY

CONSULTING ENGINEERS & GEOLOGISTS, INC.
350 HARTNELL AVENUE REDDING, CA. 96002
WWW.SHN-ENGR.COM 530-221-5424

NO.	DATE	REVISION	BY

DSGN EAS/DLY
DR NMD
CHK JSO
APVD

SUSANVILLE INDIAN RANCHERIA
SPRING RIDGE ROAD
SUSANVILLE, CALIFORNIA

GENERAL NOTES

SHEET G-4
SEQ 4
DATE 12/2015
PROJ. NO. 515018

SAVED: 2/8/2016 11:31 AM CNEWELL, PLOTTED: 2/8/2016 11:33 AM CHRIS D. NEWELL
\\EurekaSVRNEW\Projects\CAD-FILES\Redding\2015\515018\515018-GEN-SHEETS.dwg

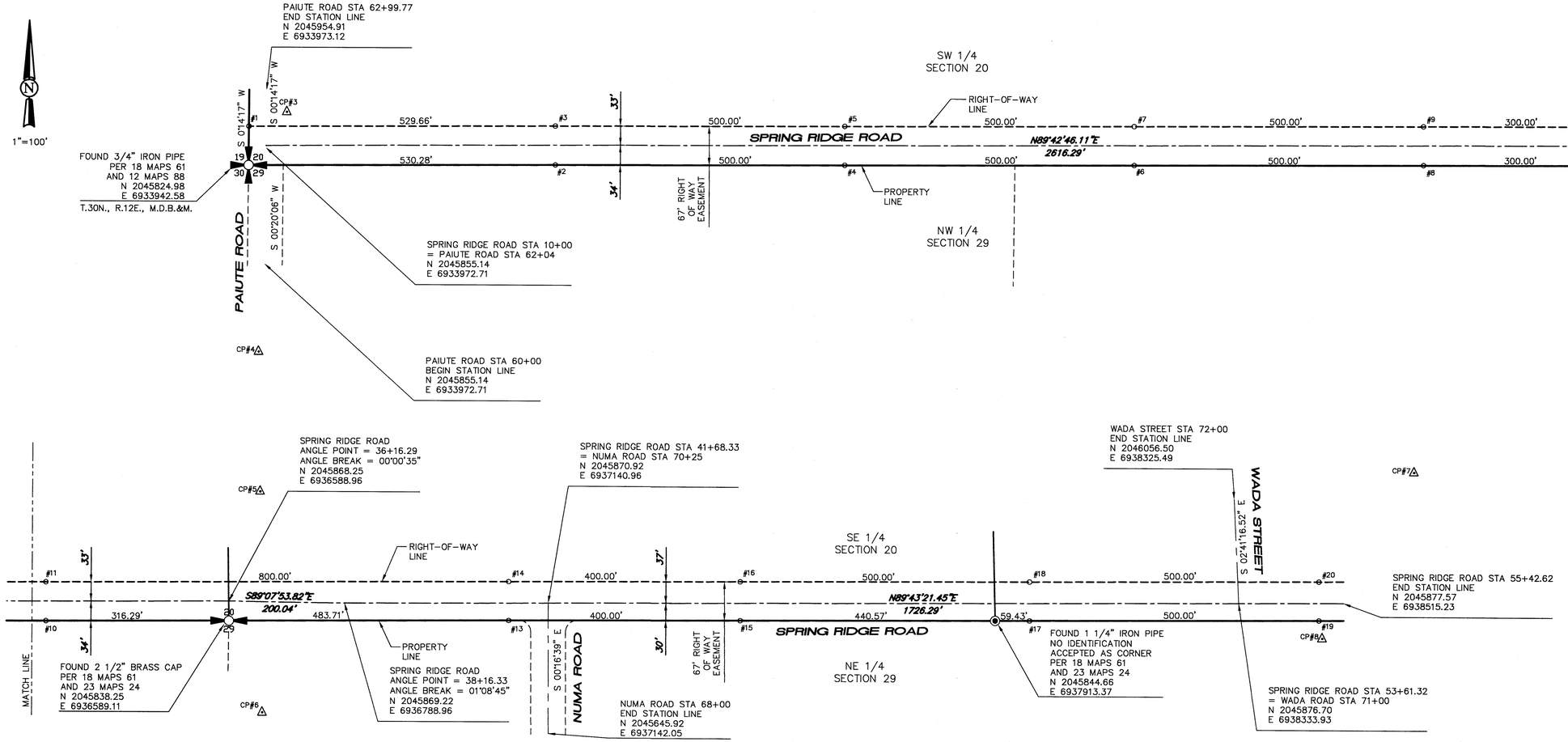

SURVEY CONTROL TABLE				
POINT NUMBER	NORTHING	EASTING	ELEVATION	
CP#3	2045916.97	6934008.33	4392.66	5/8" REBAR WITH PLASTIC CAP "SHN CONTROL"
CP#4	2045503.67	6933961.91	4372.63	SURVEY MARKER WITH WASHER "SHN CONSULTING ENG. CONTROL"
CP#5	2046061.22	6936642.40	4412.40	5/8" REBAR WITH PLASTIC CAP "SHN CONTROL"
CP#6	2045680.47	6936647.67	4404.49	5/8" REBAR WITH PLASTIC CAP "SHN CONTROL"
CP#7	2046103.63	6938636.17	4478.44	PK NAIL WITH SHINER
CP#8	2045816.69	6938478.79	4434.13	5/8" REBAR WITH PLASTIC CAP "SHN CONTROL"

MULTIPLY GROUND DISTANCES BY THE COMBINED SCALE FACTOR TO OBTAIN GRID DISTANCES.

ALL DIMENSIONS ALONG RIGHT OF WAY LINES ARE FROM MONUMENT TO MONUMENT.

- o SET 5/8" REBAR WITH 2" ALUMINUM CAP MARKED "BIA ROAD MON #1", EXAMPLE FOR POINT NUMBER 1
- ◉ FOUND MONUMENT AS NOTED
- 19 20 / 30 29 FOUND MONUMENT FOR SECTION CORNER
- 20 / 29 FOUND MONUMENT FOR QUARTER-SECTION CORNER

PROJECT UNITS: US SURVEY FEET

BASIS OF COORDINATES: CALIFORNIA STATE PLANE COORDINATE SYSTEM, ZONE 1, NAD83(CORS)
BASIS OF ELEVATIONS: NAVD 88
COORDINATES AND ELEVATIONS ARE BASED ON GPS TIES TO NATIONAL GEODETIC SURVEY (NGS) CONTROL STATION N 843, A STANDARD DISK MONUMENT IN A ROCK OUTCROPPING, NEAR THE END OF A STONE WALL AT INSPIRATION POINT IN SUSANVILLE, AND NGS CONTROL STATION E 843, A STANDARD DISK MONUMENT IN A GRANITE OUTCROPPING, 4.1 MILES NORTH OF SUSANVILLE ALONG THE ROAD TO BIEBER.
COMBINED SCALE FACTOR: 0.99971118

REGISTERED PROFESSIONAL ENGINEER
ERIC ALLEN SCHREIER
No. 69219
Exp. 6/30/16
CIVIL
STATE OF CALIFORNIA
12-29-15

VERIFY SCALES
BAR IS ONE INCH ON ORIGINAL DRAWING
0 1"
IF NOT ONE INCH ON THIS SHEET ADJUST SCALES ACCORDINGLY

CONSULTING ENGINEERS & GEOLOGISTS, INC.
350 HARTNELL AVENUE
REDDING, CA. 96002
WWW.SHN-ENGR.COM
530-221-5424

NO.	DATE	REVISION	BY

DSGN EAS/DLY
DR DLY/NMD
CHK JSO
APVD

SUSANVILLE INDIAN RANCHERIA
SPRING RIDGE ROAD
SUSANVILLE, CALIFORNIA

SURVEY CONTROL DIAGRAM

SHEET G-5
SEQ 5
DATE 12/2015
PROJ. NO. 515018

SAVED: 2/5/2016 12:00 PM NDOWNEY, PLOTTED: 2/8/2016 11:33 AM CHRIS D. NEWELL
\\EurekaSVRNEW\Projects\CAD-FILES\Redding\2015\515018\509034-SRR-07-CDT.dwg

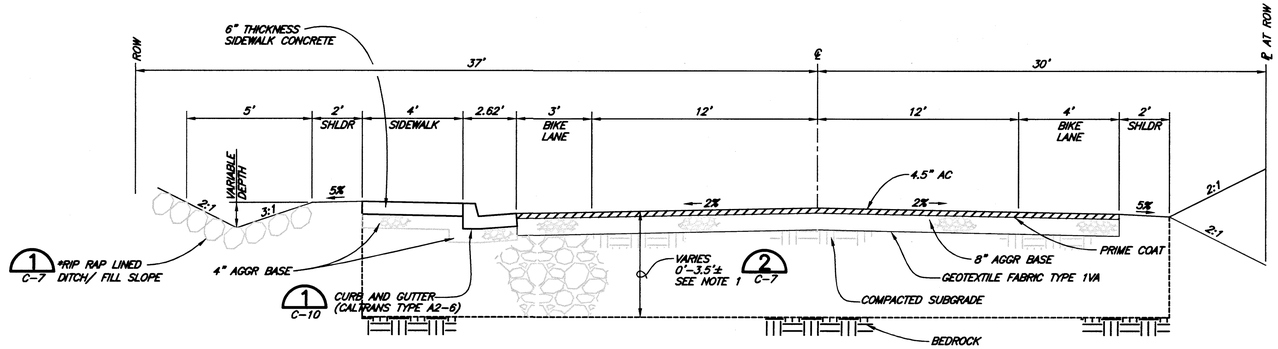

STA 41+25 TO 53+61.32
*STA 42+50 TO 53+21

NOTES:

1. PORTIONS OF SPRING RIDGE ROAD ARE UNDERLAID WITH EXPANSIVE CLAY SOILS. THESE SOILS SHALL BE REMOVED TO BEDROCK AS RECOMMENDED BY THE PROJECT GEOTECHNICAL ENGINEER. THE EXTENT OF EXCAVATION SHALL BE DETERMINED IN THE FIELD BY THE TRIBE.
2. INSTALL PRIME COAT TO AGGREGATE BASE PRIOR TO INSTALLING AC. SEE SECTION 411.
3. TACK COAT EDGE OF EXISTING AC PRIOR TO INSTALLING AC. SEE SECTION 412.

TYPICAL SECTION

NTS

229-16

REGISTERED PROFESSIONAL ENGINEER
ERIC ALLEN SCHNEIDER
No. 69219
Exp. 6/30/16
CIVIL
STATE OF CALIFORNIA

SAVED: 2/8/2016 10:50 AM CNEWELL, PLOTTED: 2/8/2016 2:49 PM ERIC SCHNEIDER
\\Eureka\Projects\CAD-FILES\Redding\2015\515018\515018-SECTIONS.dwg

VERIFY SCALES
BAR IS ONE INCH ON ORIGINAL DRAWING
0 1"
IF NOT ONE INCH ON THIS SHEET, ADJUST SCALES ACCORDINGLY

SHN
CONSULTING ENGINEERS & GEOLOGISTS, INC.
350 HARTNELL AVENUE REDDING, CA. 96002
WWW.SHN-ENGR.COM 530-221-5424

NO.	DATE	REVISION	BY

DESIGN EAS/DLY
DR DLY/NMD
CHK JSO
APVD

SUSANVILLE INDIAN RANCHERIA
SPRING RIDGE ROAD
SUSANVILLE, CALIFORNIA

TYPICAL SECTIONS

SHEET C-1
SEQ 6
DATE 12/2015
PROJ. NO. 515018

PLAN
1"=40'

PROFILE
SCALE: 1"=40' H
1"=5' V

2-29-16

REGISTERED PROFESSIONAL ENGINEER
ERIC ALLEN SWANSON
No. 69219
Exp. 6/30/16
CIVIL
STATE OF CALIFORNIA

VERIFY SCALES
BAR IS ONE INCH ON ORIGINAL DRAWING
0 1"
IF NOT ONE INCH ON THIS SHEET ADJUST SCALES ACCORDINGLY

SHN
CONSULTING ENGINEERS & GEOLOGISTS, INC.
350 HARTNELL AVENUE
REDDING, CA. 96002
WWW.SHN-ENGR.COM
530-221-5424

NO.	DATE	REVISION	BY

DSGN EAS/DLY
DR DLY/NMD
CHK JSO
APVD

SUSANVILLE INDIAN RANCHERIA
SPRING RIDGE ROAD
SUSANVILLE, CALIFORNIA

PLAN & PROFILE 10+00-21+00

SHEET C-2
SEQ 7
DATE 12/2015
PROJ. NO. 515018

SAVED: 2/8/2016 11:04 AM CNEWELL, PLOTTED: 2/8/2016 11:34 AM CHRIS D. NEWELL
\\EurekaSVRNEW\Projects\CAD-FILES\Redding\2015\515018\515018-PROFILE-SHTS.dwg

PLAN
1"=40'

PROFILE
SCALE: 1"=40' H
1"=5' V

SAVED: 2/8/2016 11:04 AM CNEWELL, PLOTTED: 2/8/2016 11:34 AM CHRIS D. NEWELL
\\EurekaSVRNEW\Projects\CAD-FILES\Redding\2015\515018\515018-PROFILE-SHTS.dwg

VERIFY SCALES
BAR IS ONE INCH ON ORIGINAL DRAWING 1"
IF NOT ONE INCH ON THIS SHEET ADJUST SCALES ACCORDINGLY

SHN
CONSULTING ENGINEERS & GEOLOGISTS, INC.
350 HARTNELL AVENUE
REDDING, CA. 96002
WWW.SHN-ENGR.COM
530-221-5424

NO.	DATE	REVISION	BY

DSGN EAS/DLY
DR DLY/NMD
CHK JSO
APVD

SUSANVILLE INDIAN RANCHERIA
SPRING RIDGE ROAD
SUSANVILLE, CALIFORNIA

PLAN & PROFILE 21+00-32+50

SHEET C-3
SEQ 8
DATE 12/2015
PROJ. NO. 515018

REGISTERED PROFESSIONAL ENGINEER
ERIC ALLEN SCHREIER
No. 69219
Exp. 6/30/16
CIVIL
STATE OF CALIFORNIA
2-8-16

MATCH 32+50 SEE SHT C-3

4' SIDEWALK
3' BIKE LANE
12'
20' CONSTRUCTION EASEMENT
PROPOSED R/W
67' R/W
12'
A2-6 CURB
1 C-10
TOP OF BANK
TOE OF SLOPE
CONSTRUCTION STAGING AND STOCKPILE AREA
R2-1 35 MPH
BEGIN PHASE 1 CONSTRUCTION
STA 41+36.00
REMOVE AND REPLACE W1-6R
REMOVE AND RELOCATE W1-1L SIGN
REMOVE AND RELOCATE SIGN
℄ DITCH
(E) BARRICADE AND SIGNS TO BE LEFT IN PLACE
STREET SIGN
1 C-6
REMOVE AND RELOCATE (E) SPEED LIMIT SIGN
NEW UTILITY PIPE
5 C-7
4' BIKE LANE
2' SHOULDER

33+00 34+00 35+00 36+00 37+00 38+00 39+00 40+00 41+00 42+00 43+00 44+00

SPRING RIDGE ROAD

NUMA ROAD

MATCH 44+00 SEE SHT C-5

PLAN
1"=40'

4430
4420
4410
4400
4390
4380

PVI STA 41+75.00
PVI ELEV 4421.15
K 67.07
LVC 350.00
HIGH PT STA 41+76.69
HIGH PT ELEV 4418.87

BVCS 40+00.00
BVCE 4416.54
EVCS 43+50.00
EVCE 4416.63

GRADE BREAK STA 38+80.06
ELEV 4413.38

2.63%
3.10%

GRADE TO MATCH (E) AS DIRECTED BY ENGINEER

PROFILE GRADE AT ℄ OF ROAD
(E) GROUND AT ℄ OF ROAD

PHASE 2
PHASE 1

33+00	34+00	35+00	36+00	37+00	38+00	39+00	40+00	41+00	42+00	43+00	44+00
(E) 4398.49 / 4393.86	(E) 4392.36 / 4388.41	(E) 4394.57 / 4388.96	(E) 4396.76 / 4398.51	(E) 4397.42 / 4400.06	(E) 4398.72 / 4401.60	(E) 4400.06 / 4403.15	(E) 4401.66 / 4404.70	(E) 4403.47 / 4408.25	(E) 4405.18 / 4407.80	(E) 4408.45 / 4409.35	(E) 4408.83 / 4410.90	(E) 4411.98 / 4412.45	(E) 4413.56 / 4413.91	(E) 4415.58 / 4415.22	(E) 4417.07 / 4416.54	(E) 4415.36 / 4417.87	(E) 4416.80 / 4418.43	(E) 4418.25 / 4418.81	(E) 4418.30 / 4418.83	(E) 4417.84 / 4418.47	(E) 4417.37 / 4417.73	(E) 4416.38 / 4418.83	(E) 4415.05 / 4415.34

PROFILE
SCALE: 1"=40' H
1"=5' V

MATCH 32+50 SEE SHT C-3

MATCH 44+00 SEE SHT C-5

REGISTERED PROFESSIONAL ENGINEER
ERIC ALLEN SOMMERER
No. 69219
Exp. 6/30/16
CIVIL
STATE OF CALIFORNIA
2-4-16

SAVED: 2/8/2016 11:04 AM CNEWELL, PLOTTED: 2/8/2016 11:34 AM CHRIS D. NEWELL
\\EurekaSVRNEW\Projects\CAD-FILES\Redding\2015\515018\515018-PROFILE-SHTS.dwg

VERIFY SCALES
BAR IS ONE INCH ON ORIGINAL DRAWING 0 1"
IF NOT ONE INCH ON THIS SHEET, ADJUST SCALES ACCORDINGLY

CONSULTING ENGINEERS & GEOLOGISTS, INC.
350 HARTNELL AVENUE REDDING, CA. 96002
WWW.SHN-ENGR.COM 530-221-5424

NO.	REVISION	BY	DATE

DSGN	EAS/DLY
DR	DLY/NMD
CHK	JSO
APVD	

SUSANVILLE INDIAN RANCHERIA
SPRING RIDGE ROAD
SUSANVILLE, CALIFORNIA
PLAN & PROFILE
32+50-44+00

SHEET C-4
SEQ 9
DATE 12/2015
PROJ. NO. 515018

PLAN
1"=40'

PROFILE
SCALE: 1"=40' H
1"=5' V

SAVED: 2/8/2016 11:04 AM CNEWELL, PLOTTED: 2/8/2016 11:34 AM CHRIS D. NEWELL
\\Eureka\SYRNEW\Projects\CAD-FILES\Redding\2015\515018\515018-PROFILE-SHTS.dwg

2-29-16

REGISTERED PROFESSIONAL ENGINEER
CHRIS ALLEN SCHNEIDER
No. 69219
Exp. 6/30/16
CIVIL
STATE OF CALIFORNIA

VERIFY SCALES
BAR IS ONE INCH ON ORIGINAL DRAWING 1"
IF NOT ONE INCH ADJUST SCALES ACCORDINGLY

SHN CONSULTING ENGINEERS & GEOLOGISTS, INC.
350 HARTNELL AVENUE REDDING, CA. 96002
WWW.SHN-ENGR.COM 530-221-5424

NO.	DATE	REVISION	BY

DSGN DY
DR DY/NMD
CHK JSO
APVD

SUSANVILLE INDIAN RANCHERIA
SPRING RIDGE ROAD
SUSANVILLE, CALIFORNIA

PLAN & PROFILE 44+00-END

SHEET C-5
SEQ 10
DATE 12/2015
PROJ. NO. 515018

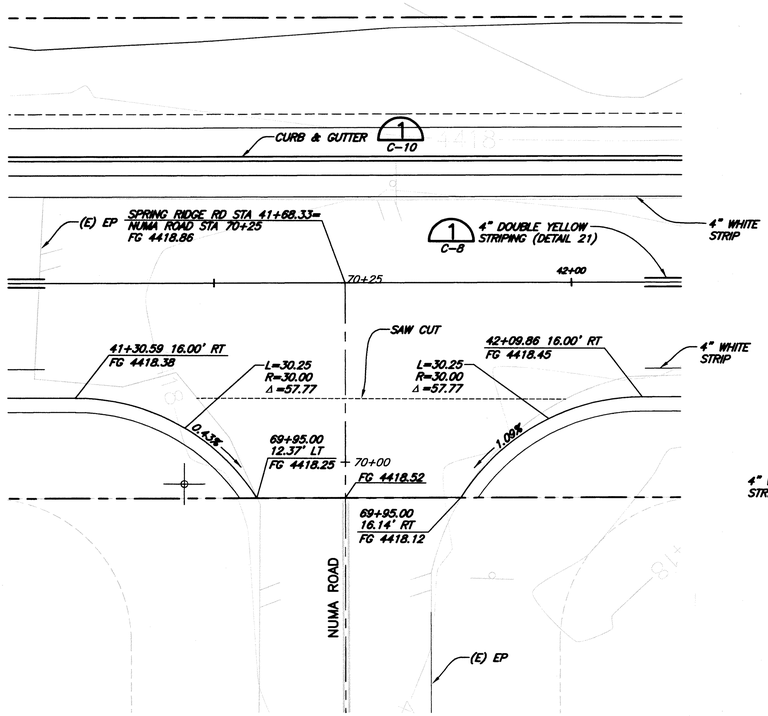

SPRING RIDGE ROAD AT NUMA ROAD

DETAIL 1
1"=10' C-4

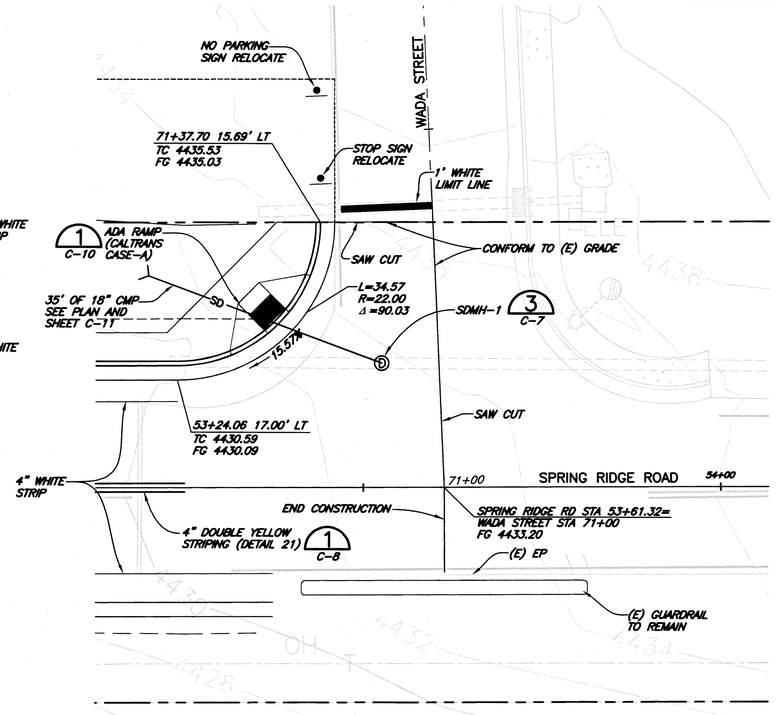

SPRING RIDGE ROAD AT WADA STREET

DETAIL 2
1"=10' C-5

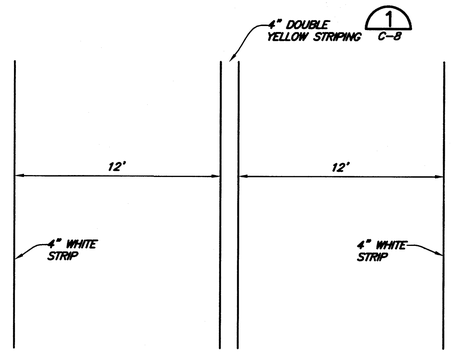

SPRING RIDGE ROAD STRIPING

DETAIL 3
NTS –

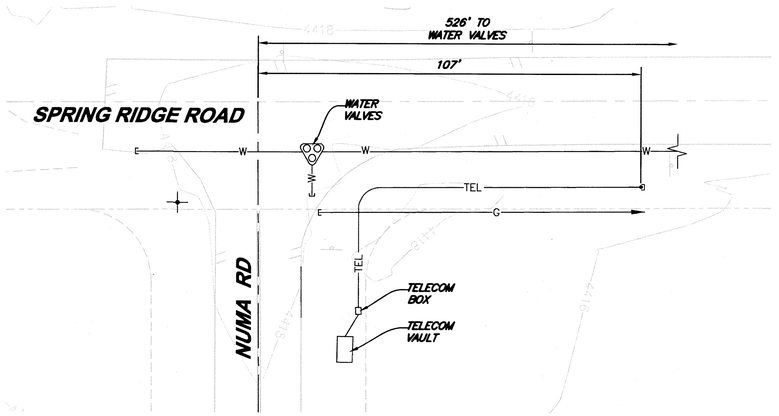

SPRING RIDGE ROAD EXISTING UTILITIES

DETAIL 4
1"=10' C-4

SAVED: 2/8/2016 11:28 AM CNEWELL, PLOTTED: 2/8/2016 11:34 AM CHRIS D. NEWELL
\\EurekaSTRNEW\Projects\CAD-FILES\Redding\2015\515018\515018-INT-RECON-DET-SRR.dwg

VERIFY SCALES
BAR IS ONE INCH ON ORIGINAL DRAWING 0 1"
IF NOT ONE INCH ON THIS SHEET, ADJUST SCALES ACCORDINGLY

CONSULTING ENGINEERS & GEOLOGISTS, INC.
350 HARTNELL AVENUE REDDING, CA. 96002
WWW.SHN-ENGR.COM 530-221-5424

NO.	DATE	REVISION	BY

DSGN DLY
DR DLY/NMD
CHK JSO
APVD

SUSANVILLE INDIAN RANCHERIA
SPRING RIDGE ROAD
SUSANVILLE, CALIFORNIA

INTERSECTION RECONSTRUCTION DETAILS

SHEET C-6
SEQ 11
DATE 12/2015
PROJ. NO. 515018

2-27-16

REGISTERED PROFESSIONAL ENGINEER
ERIC ALLEN SCHNEIDER
No. 69219
Exp. 6/30/16
CIVIL
STATE OF CALIFORNIA

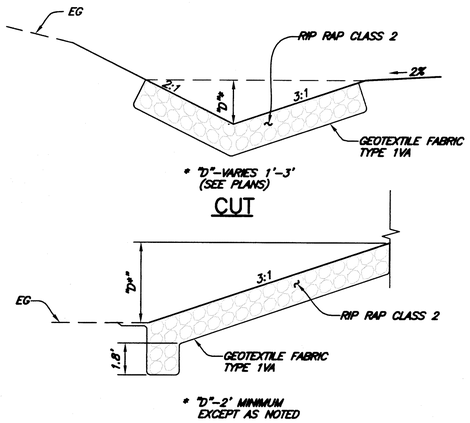

DETAIL 1 NTS C-1

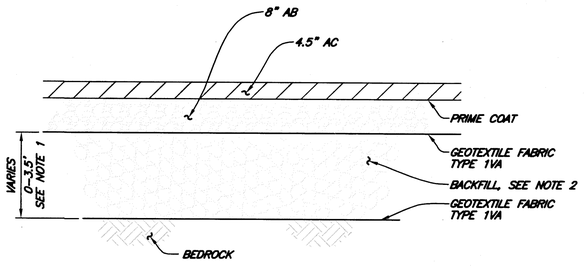

NOTES:

1. THE EXTENT OF EXCAVATION SHALL BE DETERMINED IN THE FIELD BY THE CONTRACTING OFFICER.
2. BACKFILL WITH EXISTING GROUND ASPHALT OR EXISTING BASE PRIOR TO PLACEMENT OF SUITABLE BORROW MATERIAL.

DETAIL 2 NTS C-1

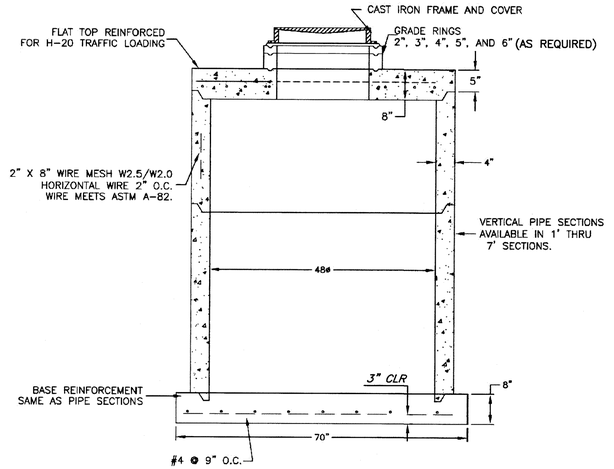

NOTES:
1) MANUFACTURED TO MEET ASTM C-478.
2) STEPS AVAILABLE
3) ALL JOINTS TO BE SEALED WITH KENTS SEAL NO. 2 OR GROUT.

STORM DRAIN MANHOLE

DETAIL 3 NTS C-5, 6

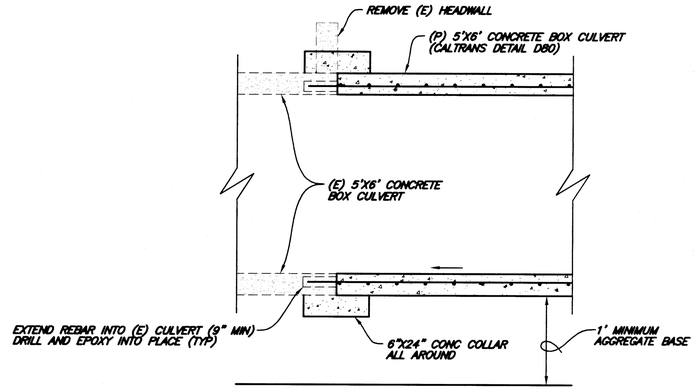

DETAIL 4 NTS C-3, 5

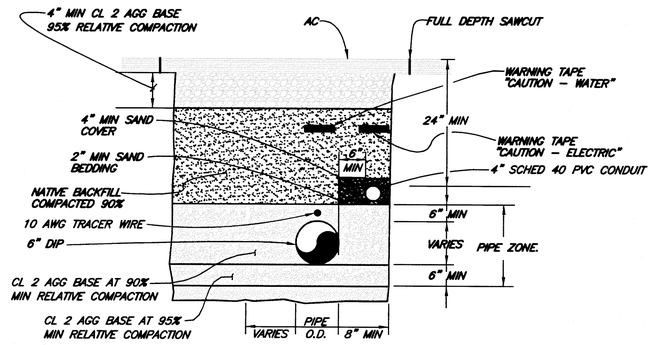

JOINT UTILITY TRENCH

DETAIL 5 NTS C-4

SAVED: 2/8/2016 11:31 AM CNEWELL, PLOTTED: 2/8/2016 11:34 AM CHRIS D. NEWELL
\EurekaSVR\NEW\Projects\CAD-FILES\Redding\2015\515018\515018-DETAILS-SRR.dwg

REGISTERED PROFESSIONAL ENGINEER ERIC ALLEN SCHRADER No. 69219 Exp. 6/30/16 CIVIL STATE OF CALIFORNIA

2-29-16

VERIFY SCALES
BAR IS ONE INCH ON ORIGINAL DRAWING 1"
IF NOT ONE INCH ON THIS SHEET ADJUST SCALES ACCORDINGLY

CONSULTING ENGINEERS & GEOLOGISTS, INC.
350 HARTNELL AVENUE REDDING, CA. 96002
WWW.SHN-ENGR.COM 530-221-5424

NO.	DATE	REVISION	BY

DSGN DLY
DR DLY/NMD
CHK JSO
APVD

SUSANVILLE INDIAN RANCHERIA
SPRING RIDGE ROAD
SUSANVILLE, CALIFORNIA

DETAILS

SHEET C-7
SEQ 12
DATE 12/2015
PROJ. NO. 515018

SAVED: 2/8/2016 11:31 AM CNEWELL, PLOTTED: 2/8/2016 11:35 AM CHRIS D. NEWELL
\\EurekaSVRNEW\Projects\CAD-FILES\Redding\2015\515018\515018-DETAILS-SRR.dwg

9

2010 STANDARD PLAN A20A

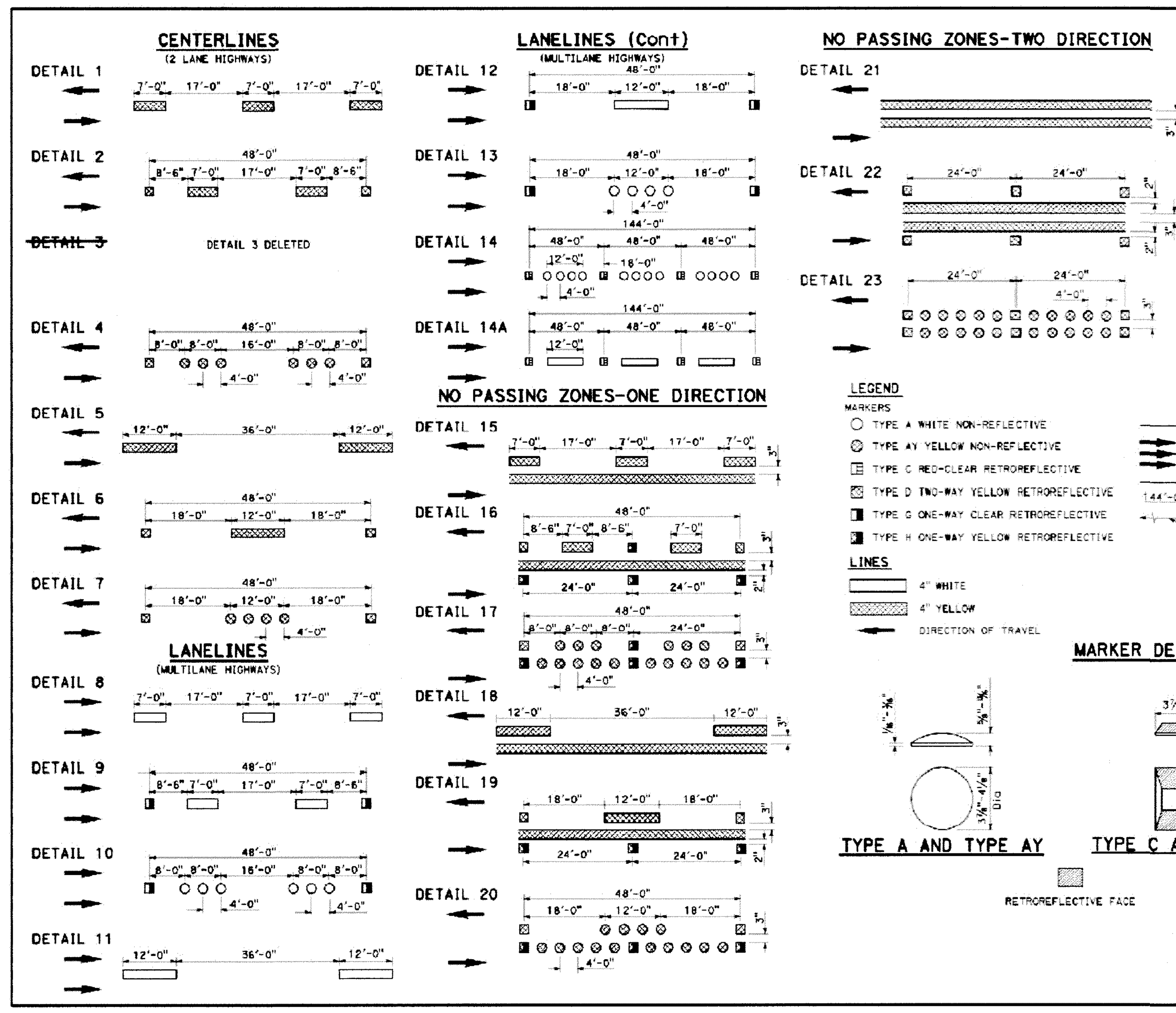

TYPICAL LANE LINE DELINEATION IN ADVANCE OF EXIT RAMP

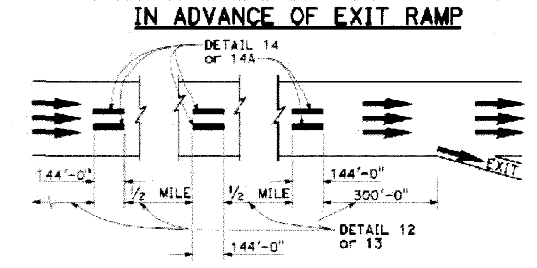

NOTE:
Detail 14 is to be used in combination with Detail 13. Detail 14A is to be used in combination with Detail 12.

Roberta L. McLaughlin
REGISTERED CIVIL ENGINEER
May 20, 2011
PLANS APPROVAL DATE

STATE OF CALIFORNIA
DEPARTMENT OF TRANSPORTATION

PAVEMENT MARKERS AND TRAFFIC LINES TYPICAL DETAILS

NO SCALE

A20A

DETAIL 1
NTS C-6

172

2010 STANDARD PLAN D80

SPAN, S	4'					
HEIGHT, H	2'		3'		4'	
MAXIMUM EARTH COVER	10'	20'	10'	20'	10'	20'
Conc ROOF T_1	7"	7½"	7"	7½"	7"	7½"
Conc WALLS T_2	6"	6"	6½"	6½"	7"	7½"
Conc INVERT T_3	7"	7½"	7"	7½"	7"	7½"
Reinf SPACING	7"	6"	7"	6"	7"	6"
Reinf "a" SIZE BAR	#6	#6	#6	#6	#6	#6
Reinf "e" SIZE BAR	#4	#4	#5	#6	#5	#6
QUANTITIES CONCRETE CF/LF	7.8	8.3	9.2	9.6	10.7	11.6
QUANTITIES REINFORCEMENT LB/LF	47.7	51.1	57.8	71.4	63.5	80.8
*** SOIL PRESSURE (ksf)	2.4	4.5	2.4	4.5	2.5	4.6

SPAN, S	5'							
HEIGHT, H	2'		3'		4'		5'	
MAXIMUM EARTH COVER	10'	20'	10'	20'	10'	20'	10'	20'
Conc ROOF T_1	7½"	8"	7½"	8"	7½"	8"	7½"	8"
Conc WALLS T_2	6"	6"	6½"	6½"	7"	7"	6½"	8"
Conc INVERT T_3	7½"	8"	7½"	8"	7½"	8"	7½"	8"
Reinf SPACING	8½"	6"	8½"	5½"	8"	5½"	8"	5"
Reinf "a" SIZE BAR	#7	#7	#7	#7	#7	#7	#7	#6
Reinf "e" SIZE BAR	#4	#4	#5	#5	#5	#6	#6	#6
QUANTITIES CONCRETE CF/LF	9.5	10.0	10.9	11.4	12.4	12.9	14.1	15.1
QUANTITIES REINFORCEMENT LB/LF	57.8	73.7	66.6	92.5	83.0	111	101	114
*** SOIL PRESSURE (ksf)	2.4	4.5	2.4	4.5	2.5	4.6	2.5	4.6

SPAN, S	6'							
HEIGHT, H	3'		4'		5'		6'	
MAXIMUM EARTH COVER	10'	20'	10'	20'	10'	20'	10'	20'
Conc ROOF T_1	8"	9"	8"	9"	8"	9"	8"	9"
Conc WALLS T_2	7"	7"	7"	7"	7½"	8"	8"	9½"
Conc INVERT T_3	8"	9"	8"	9"	8"	9½"	8"	9½"
Reinf SPACING	7½"	5"	7½"	5"	7"	5"	7"	4½"
Reinf "a" SIZE BAR	#7	#6	#7	#6	#7	#6	#7	#6
Reinf "e" SIZE BAR	#4	#5	#6	#6	#6	#6	#7	#6
QUANTITIES CONCRETE CF/LF	13.1	14.3	14.2	15.4	15.9	18.0	17.8	21.2
QUANTITIES REINFORCEMENT LB/LF	77.6	94.7	96.6	114	110	126	132	152
*** SOIL PRESSURE (ksf)	2.4	4.6	2.5	4.6	2.5	4.6	2.5	4.7

SPAN, S	7'									
HEIGHT, H	3'		4'		5'		6'		7'	
MAXIMUM EARTH COVER	10'	20'	10'	20'	10'	20'	10'	20'	10'	20'
Conc ROOF T_1	8"	10"	8"	10"	8"	10½"	8½"	10½"	8½"	10½"
Conc WALLS T_2	6½"	7"	6½"	7½"	7"	8"	7½"	9½"	8½"	11"
Conc INVERT T_3	8"	10½"	8"	10½"	8"	10½"	8"	10½"	8½"	10½"
Reinf SPACING	6"	4½"	6"	4½"	6"	5½"	6"	5½"	6"	5½"
Reinf "a" SIZE BAR	#7	#6	#7	#6	#7	#7	#7	#7	#7	#7
Reinf "e" SIZE BAR	#4	#4	#5	#5	#6	#7	#7	#7	#7	#7
QUANTITIES CONCRETE CF/LF	14.0	17.5	15.1	19.1	16.7	21.3	18.8	24.5	21.8	28.3
QUANTITIES REINFORCEMENT LB/LF	102	106	115	124	134	166	160	181	173	196
*** SOIL PRESSURE (ksf)	2.4	4.6	2.4	4.6	2.5	4.7	2.5	4.7	2.6	4.8

SPAN, S	8'									
HEIGHT, H	4'		5'		6'		7'		8'	
MAXIMUM EARTH COVER	10'	20'	10'	20'	10'	20'	10'	20'	10'	20'
Conc ROOF T_1	8½"	11½"	8½"	11½"	8½"	11½"	8½"	11½"	8½"	11½"
Conc WALLS T_2	6½"	7½"	7"	8½"	7½"	9½"	8½"	11"	9"	12½"
Conc INVERT T_3	8½"	11½"	8½"	11½"	8½"	12"	8½"	12"	8½"	12"
Reinf SPACING	5½"	5"	5½"	5"	6"	4½"	5½"	4½"	5½"	4½"
Reinf "a" SIZE BAR	#7	#7	#7	#7	#7	#7	#7	#7	#7	#7
Reinf "e" SIZE BAR	#5	#6	#6	#6	#7	#6	#7	#7	#7	#7
QUANTITIES CONCRETE CF/LF	17.2	22.7	18.8	25.1	20.6	28.3	23.3	32.1	25.5	36.4
QUANTITIES REINFORCEMENT LB/LF	135	166	156	177	184	206	197	252	209	269
*** SOIL PRESSURE (ksf)	2.4	4.6	2.5	4.7	2.5	4.7	2.6	4.8	2.6	4.9

SPAN, S	10'											
HEIGHT, H	5'		6'		7'		8'		9'		10'	
MAXIMUM EARTH COVER	10'	20'	10'	20'	10'	20'	10'	20'	10'	20'	10'	20'
Conc ROOF T_1	9½"	12"	9½"	12"	9½"	12"	9½"	12"	9½"	12"	9½"	12"
Conc WALLS T_2	8½"	8½"	8½"	9½"	9"	10½"	9"	12"	10"	13½"	11"	15"
Conc INVERT T_3	10"	12½"	10"	12½"	10"	12½"	10"	13"	10"	13"	10"	13"
Reinf SPACING	11"	12"	12"	12"	11"	11"	10"	11"	10"	10"	11"	10"
Reinf **"a" SIZE BAR	#7	#8	#7	#8	#7	#7	#6	#7	#6	#7	#7	#7
Reinf "b" SIZE BAR	#7	#7	#6	#7	#6	#7	#6	#7	#6	#7	#7	#7
Reinf "b" DIMENSION "B" ft-inch	2-11	2-11	2-11	3-0	2-11	3-9	2-11	3-9	2-11	3-9	2-11	3-9
Reinf "b" DIMENSION "Bw" ft-inch	4-10	5-0	4-10	5-0	4-10	5-0	4-10	5-0	4-10	5-0	4-7	4-7
Reinf "c" SIZE BAR *	#6	#7	#6	#7	#6	#7	#6	#7	#7	#7	#7	#7
Reinf "c" DIMENSION "C" ft-inch	3-4	3-6	7-4	4-8	7-7	4-8	8-2	4-8	7-7	5-2	7-7	5-11
Reinf *"e" SIZE BAR	#4	#4	#4	#5	#6	#6	#6	#7	#7	#7	#8	#8
QUANTITIES CONCRETE CF/LF	25.1	30.4	27.1	33.1	29.2	36.2	30.7	41	34	45.8	37.6	51
QUANTITIES REINFORCEMENT LB/LF	271	296	278	333	341	366	359	406	428	469	487	530
*** SOIL PRESSURE (ksf)	3.7	4.7	3.8	4.7	3.8	4.8	3.8	4.8	3.9	4.9	3.9	5.0

SPAN, S	12'													
HEIGHT, H	6'		7'		8'		9'		10'		11'		12'	
MAXIMUM EARTH COVER	10'	20'	10'	20'	10'	20'	10'	20'	10'	20'	10'	20'	10'	20'
Conc ROOF T_1	10½"	14½"	10½"	14½"	10½"	14½"	10½"	14½"	10½"	14½"	10½"	14½"	10½"	14½"
Conc WALLS T_2	9"	10½"	9"	10½"	9½"	12"	10"	13½"	11"	15"	12½"	16½"	13½"	18"
Conc INVERT T_3	11"	14½"	11"	15"	11"	15"	11"	15"	11½"	15"	11½"	15½"	11½"	15½"
Reinf SPACING	9"	10"	9"	10"	9"	10"	8"	10"	8"	10"	10"	9"	9"	8"
Reinf **"a" SIZE BAR	#6	#7	#6	#7	#6	#7	#6	#7	#6	#7	#7	#7	#6	#6
Reinf "b" SIZE BAR	#6	#7	#6	#7	#6	#7	#6	#8	#7	#8	#7	#8	#6	#7
Reinf "b" DIMENSION "B" ft-inch	3-1	3-2	3-9	3-9	3-9	3-9	3-7	3-9	3-7	4-4	3-7	4-4	4-4	4-4
Reinf "b" DIMENSION "Bw" ft-inch	6-0	5-10	6-2	6-7	6-2	6-7	4-11	4-11	4-11	4-11	4-11	4-11	4-4	4-4
Reinf "c" SIZE BAR *	#6	#7	#6	#7	#6	#7	#6	#7	#6	#7	#7	#7	#7	#7
Reinf "c" DIMENSION "C" ft-inch	4-4	3-10	8-1	5-7	8-1	5-7	8-1	5-7	8-1	5-7	8-1	6-4	8-1	6-10
Reinf *"e" SIZE BAR	#4	#4	#4	#4	#4	#5	#4	#5	#5	#5	#6	#6	#6	#6
QUANTITIES CONCRETE CF/LF	33.2	43.7	34.7	46.1	37	50.4	39.5	55.3	43.7	60.6	48.7	67.1	53.1	73.5
QUANTITIES REINFORCEMENT LB/LF	322	371	379	417	390	449	430	477	499	500	527	610	530	614
*** SOIL PRESSURE (ksf)	3.6	4.8	3.6	4.8	3.6	4.9	3.6	4.9	3.7	5.0	3.7	5.0	3.8	5.1

SPAN, S	14'															
HEIGHT, H	7'		8'		9'		10'		11'		12'		13'		14'	
MAXIMUM EARTH COVER	10'	20'	10'	20'	10'	20'	10'	20'	10'	20'	10'	20'	10'	20'	10'	20'
Conc ROOF T_1	12"	16½"	12"	16½"	12"	16½"	12"	16½"	12"	16½"	12"	16½"	12"	16½"	12"	16½"
Conc WALLS T_2	9½"	11"	9½"	12"	10"	13½"	11½"	15"	12½"	16½"	13½"	18"	15"	19½"	16½"	21½"
Conc INVERT T_3	12½"	17"	12½"	17"	12½"	17"	12½"	17½"	12½"	17½"	13"	17½"	13"	18"	13"	18"
Reinf SPACING	10"	9"	10"	9"	10"	8"	10"	8"	9"	8"	8"	10"	10"	10"	10"	9"
Reinf **"a" SIZE BAR	#7	#8	#7	#8	#7	#7	#7	#7	#7	#7	#6	#8	#7	#7	#7	#7
Reinf "b" SIZE BAR	#7	#7	#7	#7	#7	#7	#8	#7	#8	#7	#7	#8	#7	#8	#8	#8
Reinf "b" DIMENSION "B" ft-inch	2-9	4-2	3-4	4-4	3-4	4-6	3-5	4-6	3-6	4-6	3-6	4-6	3-6	4-6	4-9	6-0
Reinf "b" DIMENSION "Bw" ft-inch	6-5	7-0	7-0	8-4	7-0	8-4	6-0	6-0	6-0	6-0	6-0	6-0	5-0	6-0	4-6	6-0
Reinf "c" SIZE BAR *	#7	#7	#7	#7	#7	#7	#7	#7	#7	#7	#7	#8	#8	#8	#8	#8
Reinf "c" DIMENSION "C" ft-inch	4-3	4-2	6-9	6-9	5-10	5-10	6-0	6-4	8-11	6-4	8-11	7-0	8-11	7-7	8-11	7-9
Reinf *"e" SIZE BAR	#4	#4	#4	#4	#4	#4	#5	#5	#5	#5	#5	#6	#7	#7	#7	#7
QUANTITIES CONCRETE CF/LF	42.9	57	44.5	60.7	47	65.6	51.7	71.8	55.8	77.7	60.9	84.2	66.9	91.8	73.4	101
QUANTITIES REINFORCEMENT LB/LF	413	529	467	585	467	608	526	632	633	651	630	717	688	737	747	861
*** SOIL PRESSURE (ksf)	3.4	4.9	3.5	4.9	3.5	4.9	3.5	5.0	3.6	5.1	3.6	5.1	3.7	5.2	3.7	5.3

* See Note 5
** See Note 6
*** See Note 10

"d" BARS, FOR EARTH COVERS UP TO AND INCLUDING 10'-0"								
SPAN	4'	5'	6'	7'	8'	10'	12'	14'
NUMBER	7	8	9	10	11	12	15	20

David J. Forester
REGISTERED CIVIL ENGINEER
May 20, 2011
PLANS APPROVAL DATE

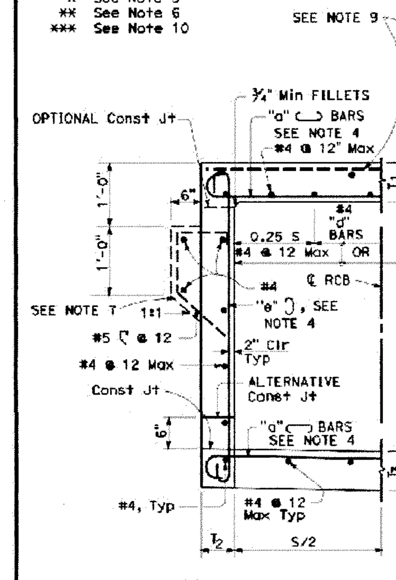

TYPICAL SECTION
SPANS 4' THRU 8'

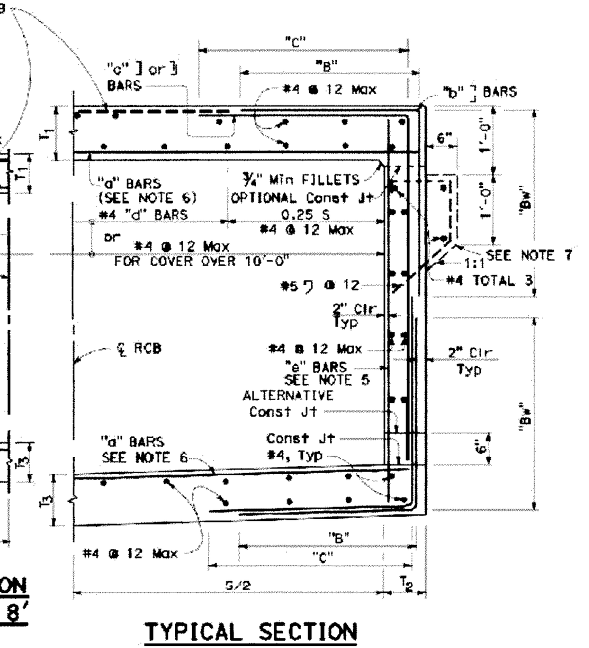

TYPICAL SECTION
SPANS 10' THRU 14'

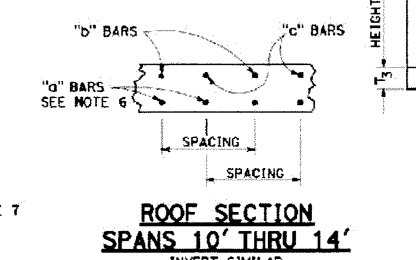

ROOF SECTION
SPANS 10' THRU 14'
INVERT SIMILAR

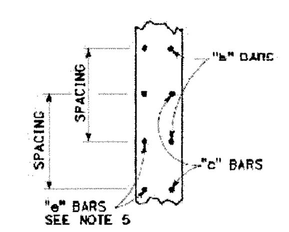

WALL SECTION
SPANS 10' THRU 14'

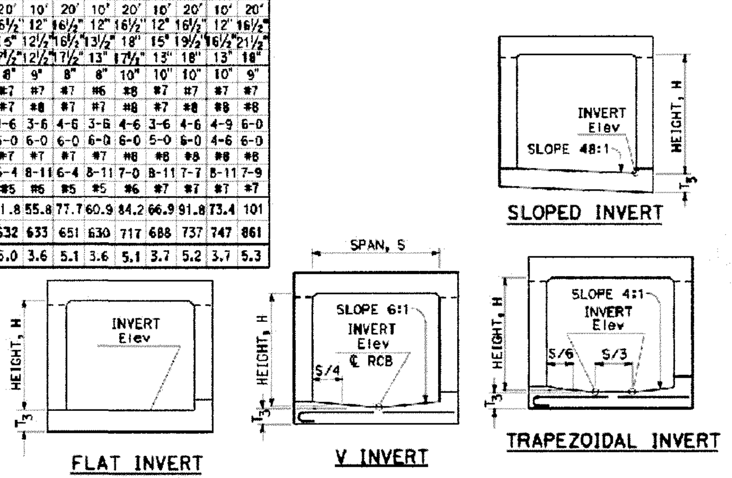

ALTERNATIVE INVERTS

NOTES:
1. For boxes with span or height less than any of those shown in table, use next greater size box concrete dimensions and reinforcement. Make necessary changes in bar lengths and quantities.
2. Quantities are approximate and for design purposes only.
3. For boxes with span or height or cover greater than those shown in tables, a special design is required.
4. It is permissible to eliminate the 180° hooks on every other bar.
5. "e" bars are at half spacing (spans 10' - 14' only).
6. "a" bars are at half spacing (spans 10' - 14' only).
7. Provide paving notch when top is exposed and when pavement is concrete, and adjust quantities.
8. For design and details not shown, see Standard Plan D82.
9. For exposed top, provide #4 @ 12 each way, lap "c" bars 2'-0" or use full span length.
10. Soil pressures shown are factored per AASHTO LRFD and include soil weight of fill over box, self weight of box and live load where applicable.

STATE OF CALIFORNIA
DEPARTMENT OF TRANSPORTATION

CAST-IN-PLACE REINFORCED CONCRETE SINGLE BOX CULVERT

NO SCALE

D80

DETAIL 2
NTS C-5

32

2010 STANDARD PLAN A73C

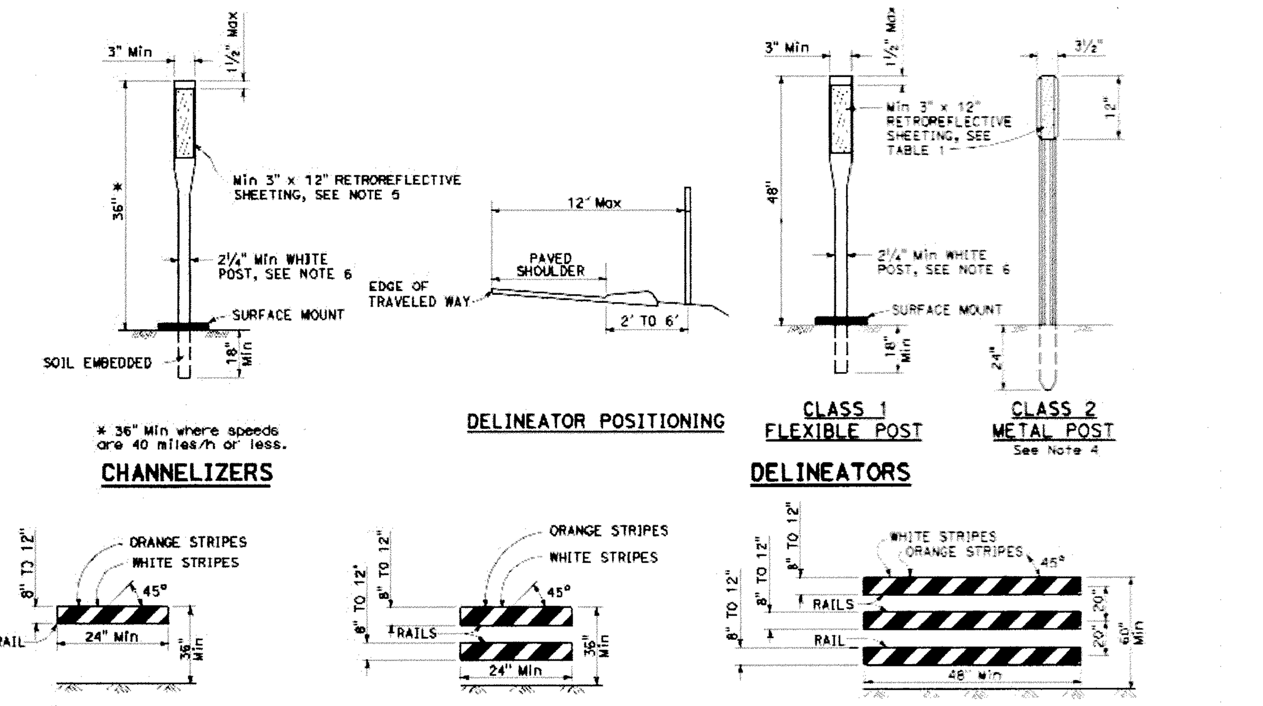

BARRICADES (See Note 3)
Only face of rails shown. Barricade construction materials and supports as specified in the specifications.

TABLE 2 - BARRICADES			
BARRICADE	TYPE I	TYPE II	TYPE III
WIDTH OF RAIL	8" Min - 12" Max *	8" Min - 12" Max *	8" Min - 12" Max *
LENGTH OF RAIL	24" Min	24" Min	48" Min
WIDTH OF STRIPES * *	6"	6"	6"
HEIGHT	36" Min	36" Min	60" Min
NUMBER OF RETROREFLECTIVE RAIL FACES	2 (ONE EACH DIRECTION)	4 (TWO EACH DIRECTION)	3 IF FACING TRAFFIC IN ONE DIRECTION 6 IF FACING TRAFFIC IN TWO DIRECTION

* For the wooden option dimensions are nominal lumber dimensions.
* * For rails less than 36" long, 4" wide stripes shall be used.

NOTE A:
Barricades to have a minimum of 270 square inches of retroreflective area facing traffic when used on freeways, expressways, and other high speed highways.

TABLE 1- DELINEATORS		
TYPE	RETROREFLECTIVE SHEETING FRONT	RETROREFLECTIVE SHEETING BACK
E	WHITE	WHITE (SEE NOTE 1)
F	WHITE	NONE
G	YELLOW	NONE
I	YELLOW	YELLOW (SEE NOTE 1)
J	RED	NONE

NOTES:
1. The retroreflective sheeting used on the back of delineator shall be a minimum size of 3" x 3".
2. The type of delineator to be installed will be designated on the plans.
3. All barricade stripes shall be retroreflective and sloped downward in the direction of the opened traffic lane.
4. See Standard Plan A73B for Metal Post Details.
5. Unless shown otherwise on the plans, or as directed by the Engineer, the color of the retroreflective sheeting for permanent channelizers shall conform to the color of the pavement markings it supplements.
6. Except, Class 1 (Flexible Post) temporary delineators and temporary channelizers in work zones shall be orange post with white retroreflective sheeting.

Roberta L. McLaughlin
REGISTERED CIVIL ENGINEER
May 20, 2011
PLANS APPROVAL DATE

STATE OF CALIFORNIA
DEPARTMENT OF TRANSPORTATION

DELINEATORS, CHANNELIZERS AND BARRICADES

NO SCALE

A73C

DETAIL 3
NTS -

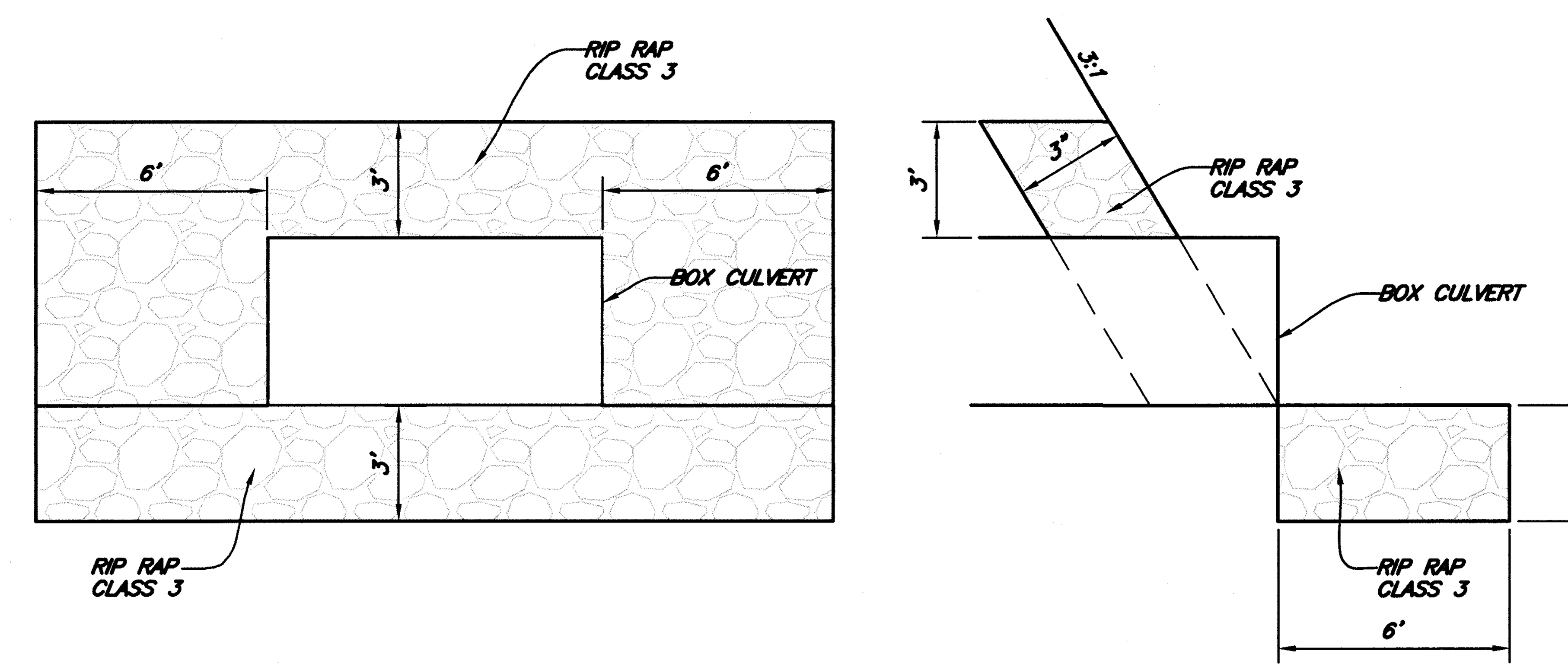

BOX CULVERT APRON INLET/OUTLET

DETAIL 4
NTS C-3, 5

REGISTERED PROFESSIONAL ENGINEER
ERIC ALLEN SCHNEIDER
No. 69219
Exp. 6/30/16
CIVIL
STATE OF CALIFORNIA
2-9-16

VERIFY SCALES
BAR IS ONE INCH ON ORIGINAL DRAWING
0 1"
IF NOT ONE INCH ON THIS SHEET, ADJUST SCALES ACCORDINGLY

SHN CONSULTING ENGINEERS & GEOLOGISTS, INC.
350 HARTNELL AVENUE
REDDING, CA. 96002
WWW.SHN-ENGR.COM
530-221-5424

NO.	DATE	REVISION	BY

DSGN DLY
DR DLY/NMD
CHK JSO
APVD

SUSANVILLE INDIAN RANCHERIA
SPRING RIDGE ROAD
SUSANVILLE, CALIFORNIA

CALTRANS STANDARD DETAILS

SHEET C-8
SEQ 13
DATE 12/2015
PROJ. NO. 515018

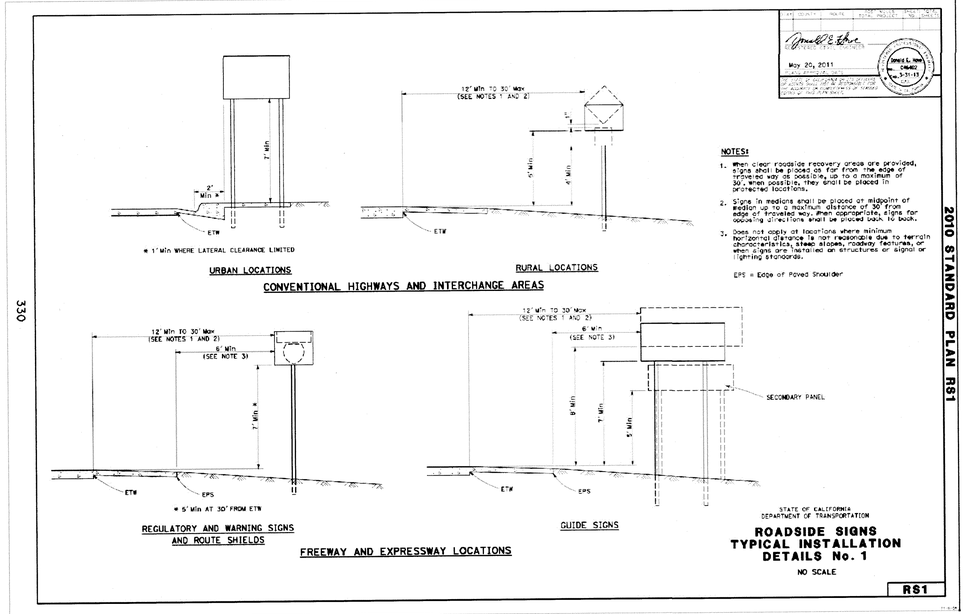

DETAIL 1
NTS

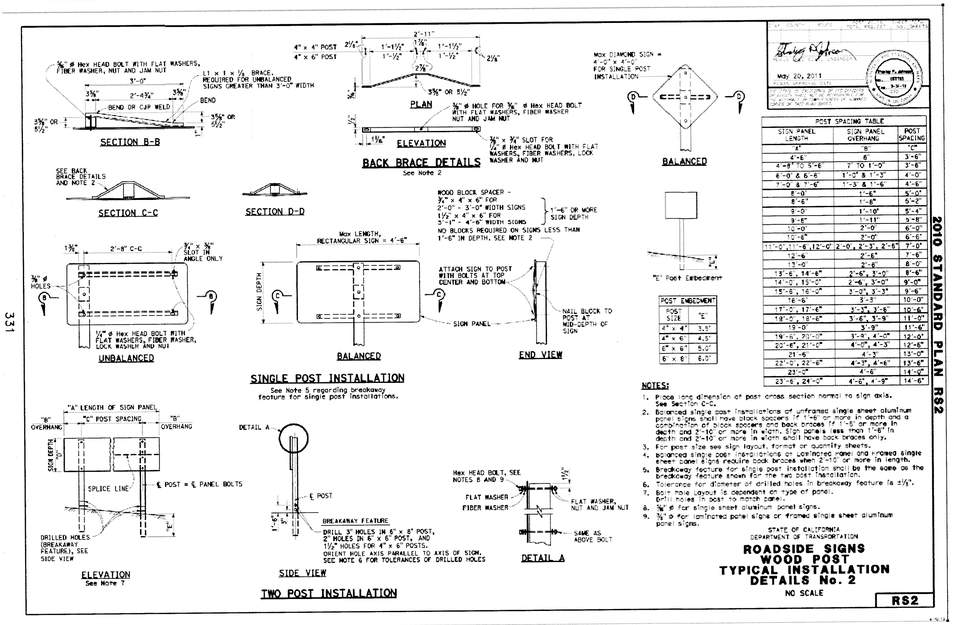

DETAIL 2
NTS

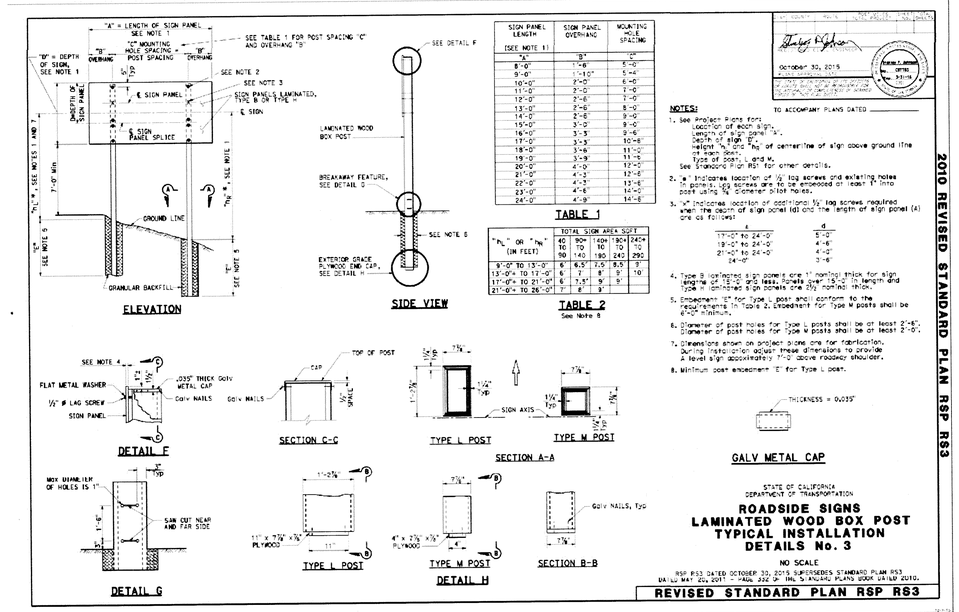

DETAIL 3
NTS

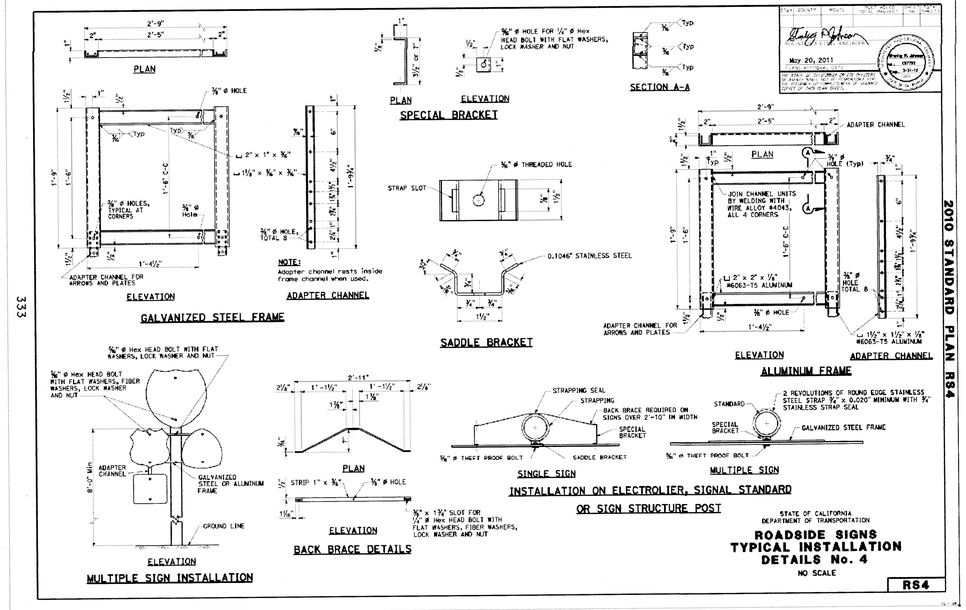

DETAIL 4
NTS

REGISTERED PROFESSIONAL ENGINEER — ERIC ALLEN SPANGLER — No. 69219 Exp. 6/30/16 CIVIL — STATE OF CALIFORNIA
2-24-16

SAVED: 2/8/2016 11:31 AM CNEWELL, PLOTTED: 2/8/2016 11:35 AM CHRIS D. NEWELL
\EurekaSRVNEW\Projects\CAD-FILES\Redding\2015\515018\515018-DETAILS-SRR.dwg

VERIFY SCALES
BAR IS ONE INCH ON ORIGINAL DRAWING 0 1"
IF NOT ONE INCH ON THIS SHEET, ADJUST SCALES ACCORDINGLY

SHN
CONSULTING ENGINEERS & GEOLOGISTS, INC.
350 HARTNELL AVENUE
REDDING, CA. 96002
WWW.SHN-ENGR.COM
530-221-5424

NO.	DATE	REVISION	BY

DSGN DLY
DR DLY/NMD
CHK JSO
APVD

SUSANVILLE INDIAN RANCHERIA
SPRING RIDGE ROAD
SUSANVILLE, CALIFORNIA

CALTRANS STANDARD DETAILS

SHEET C-9
SEQ 14
DATE 12/2015
PROJ. NO. 515018

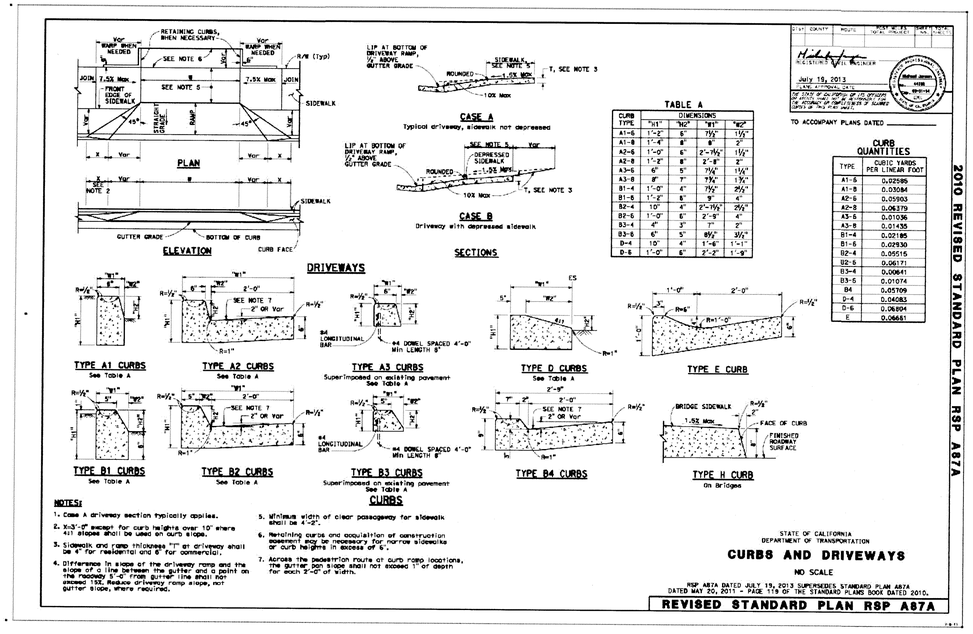

TABLE A

CURB TYPE	DIMENSIONS "H1"	"H2"	"W1"	"W2"
A1-6	1'-0"	6"	7½"	1½"
A1-8	1'-4"	8"	8"	2"
A2-6	1'-0"	6"	2'-1½"	1½"
A2-8	1'-2"	8"	2'-2"	2"
A3-6	6"	5"	7½"	1¼"
A3-8	8"	7"	7¾"	1¾"
B1-4	1'-0"	4"	7½"	2½"
B1-8	1'-2"	8"	9"	4"
B2-4	10"	4"	2'-1½"	2½"
B2-6	1'-0"	6"	2'-3"	4"
B3-4	4"	3"	7"	2"
B3-6	6"	5"	8½"	3½"
B-4	10"	4"	1'-6"	1'-1"
B-6	1'-0"	6"	2'-2"	1'-9"

CURB QUANTITIES

TYPE	CUBIC YARDS PER LINEAR FOOT
A1-6	0.02585
A1-8	0.03084
A2-6	0.05903
A2-8	0.06379
A3-6	0.01036
A3-8	0.01435
B1-4	0.02185
B1-8	0.02830
B2-4	0.05515
B2-6	0.06171
B3-4	0.00641
B3-6	0.01074
B4	0.05709
D-4	0.04083
D-6	0.06804
E	0.06661

NOTES:
1. Case A driveway section typically applies.
2. X=3'-0" except for curb heights over 10" where 4:1 slopes shall be used on curb slope.
3. Sidewalk and ramp thickness "T" at driveway shall be 4" for residential and 6" for commercial.
4. Difference in slope of the driveway ramp and the slope of a line between the gutter and a point on the roadway 5'-0" from gutter line shall not exceed 11%. Reduce driveway ramp slope, not gutter slope, where required.
5. Minimum width of clear passageway for sidewalk shall be 4'-0".
6. Retaining curbs and acquisition of construction easement may be necessary for narrow sidewalks or curb heights in excess of 6".
7. Across the pedestrian route at curb ramp locations, the gutter pan slope shall not exceed 1" of depth for each 2'-0" of width.

STATE OF CALIFORNIA
DEPARTMENT OF TRANSPORTATION
CURBS AND DRIVEWAYS
NO SCALE
RSP A87A DATED JULY 19, 2013 SUPERSEDES STANDARD PLAN A87A DATED MAY 20, 2011 - PAGE 119 OF THE STANDARD PLANS BOOK DATED 2010.
REVISED STANDARD PLAN RSP A87A

DISTRICT COUNTY ROUTE POST MILE SHEET NO. TOTAL SHEETS
Robert Hutchings
REGISTERED CIVIL ENGINEER
July 19, 2013
PLANS APPROVAL DATE
THE STATE OF CALIFORNIA OR ITS OFFICERS OR AGENTS SHALL NOT BE RESPONSIBLE FOR ANY INCORRECTIONS THAT MAY OCCUR IN THESE PLANS AND SPECIFICATIONS AS A RESULT OF ANY ALTERATIONS FROM THE ORIGINAL CONTENT OF THESE PLANS AND SPECIFICATIONS.
TO ACCOMPANY PLANS DATED

2010 REVISED STANDARD PLAN RSP A87A

DETAIL 1
NTS C-1,2,3,4,5,6

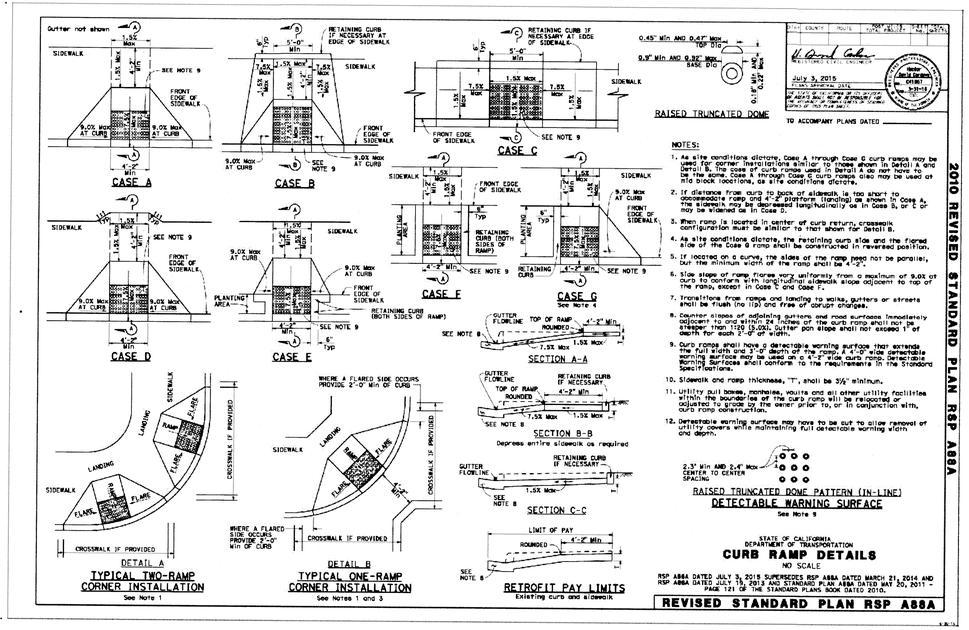

NOTES:
1. As site conditions dictate, Case A through Case C curb ramps may be used for corner installations similar to those shown in Detail A and Detail B. The case of curb ramps used in Detail A do not have to be the same. Case A through Case C curb ramps also may be used at mid block locations, as site conditions dictate.
2. If distance from curb to back of sidewalk is too short to accommodate ramp and 4'-2" platform (landing) as shown in Case A, the sidewalk may be depressed longitudinally as in Case B, or it or may be widened as in Case D.
3. When ramp is located in center of curb return, crosswalk configuration must be similar to that shown for Detail B.
4. As site conditions dictate, the retaining curb side and the flared side of the Case B ramp shall be constructed in reversed position.
5. If located on a curve, the sides of the ramp need not be parallel, but the minimum width of the ramp shall be 4'-0".
6. Side slope of ramp flares vary uniformly from a maximum of 9.0% at curb to conform with longitudinal sidewalk slope adjacent to top of the ramp, except in Case C and Case F.
7. Transitions from ramps and landing to walks, gutters or streets shall be flush (no lip) and free of objectionable slope.
8. Counter slopes of adjoining gutters and road surfaces immediately adjacent to curb ramps shall be flat. The counter slope shall not be steeper than 1:20 (5.0%). Gutter depressions exceed 1" of depth for each 2'-0" of width.
9. Curb ramps shall have a detectable warning surface that extends the full width and 2'-0" depth of the ramp. A 4'-0" wide detectable warning surface may be used on a 4'-2" wide curb ramp. Detectable warning surfaces shall conform to the requirements in the Standard Specifications.
10. Sidewalk and ramp thickness, "T", shall be ½" minimum.
11. Utility pull boxes, manholes, vaults and all other utility facilities shall not be located within the curb ramp limits or landing, adjacent to a curb ramp, unless approved by the owner prior to, or in conjunction with, curb ramp construction.
12. Detectable warning surfaces may have to be cut to allow removal of utility covers while maintaining full detectable warning width and depth.

STATE OF CALIFORNIA
DEPARTMENT OF TRANSPORTATION
CURB RAMP DETAILS
NO SCALE
RSP A88A DATED JULY 3, 2015 SUPERSEDES RSP A88A DATED MARCH 21, 2014 AND RSP A88A DATED JULY 19, 2013 AND STANDARD PLAN A88A DATED MAY 20, 2011 - PAGE 121 OF THE STANDARD PLANS BOOK DATED 2010.
REVISED STANDARD PLAN RSP A88A

DISTRICT COUNTY ROUTE POST MILE SHEET NO. TOTAL SHEETS
Robert Hutchings
REGISTERED CIVIL ENGINEER
July 3, 2015
PLANS APPROVAL DATE
THE STATE OF CALIFORNIA OR ITS OFFICERS OR AGENTS SHALL NOT BE RESPONSIBLE FOR ANY INCORRECTIONS THAT MAY OCCUR IN THESE PLANS AND SPECIFICATIONS AS A RESULT OF ANY ALTERATIONS FROM THE ORIGINAL CONTENT OF THESE PLANS AND SPECIFICATIONS.
TO ACCOMPANY PLANS DATED

2010 REVISED STANDARD PLAN RSP A88A

DETAIL 2
NTS C-6

CONSULTING ENGINEERS & GEOLOGISTS, INC.
350 HARTNELL AVENUE REDDING, CA. 96002
WWW.SHN-ENGR.COM 530-221-5424

VERIFY SCALES
BAR IS ONE INCH ON ORIGINAL DRAWING
0 1"
IF NOT ONE INCH ON THIS SHEET ADJUST SCALES ACCORDINGLY

NO.	DATE	REVISION	BY

DSGN DLY
DR DLY/NMD
CHK JSO
APVD

SUSANVILLE INDIAN RANCHERIA
SPRING RIDGE ROAD
SUSANVILLE, CALIFORNIA

CALTRANS STANDARD DETAILS

SHEET C-10
SEQ 15
DATE 12/2015
PROJ. NO. 515018

REGISTERED PROFESSIONAL ENGINEER
ERIC ALLEN SCHNEIDER
No. 69219
Exp. 6/30/16
CIVIL
STATE OF CALIFORNIA
2-29-16

SAVED: 2/8/2016 11:31 AM CNEWELL, PLOTTED: 2/8/2016 11:35 AM CHRIS D. NEWELL
\\EurekaSVRNEW\Projects\CAD-FILES\Redding\2015\515018\515018-DETAILS-SRR.dwg

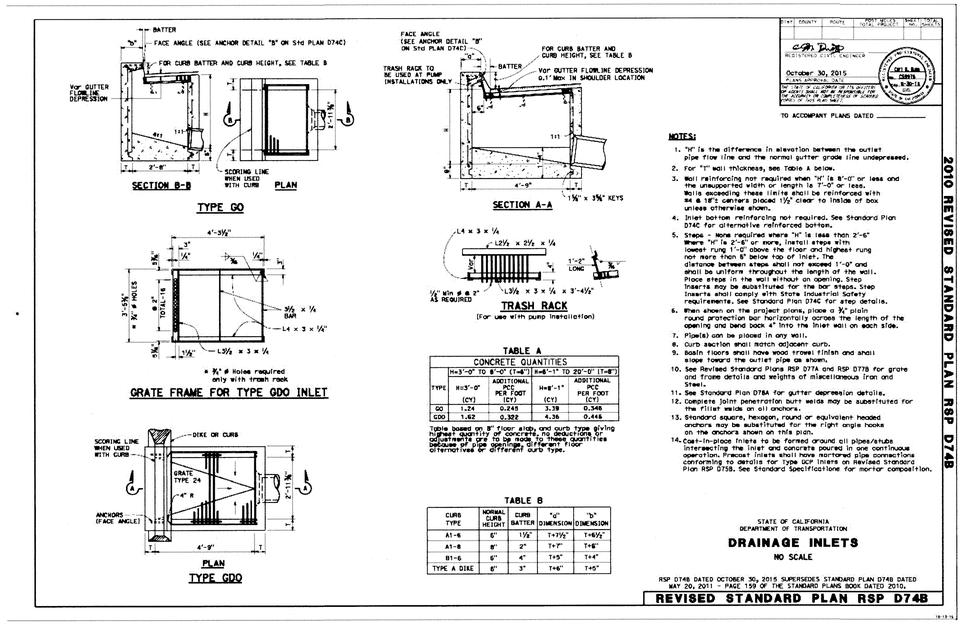

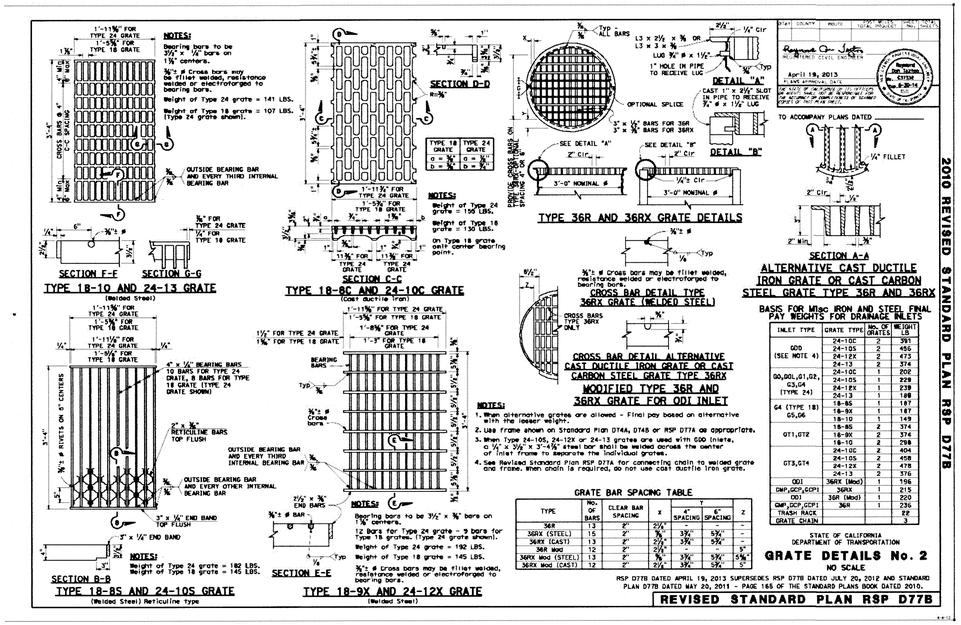

DETAIL 1
NTS C-3, 5

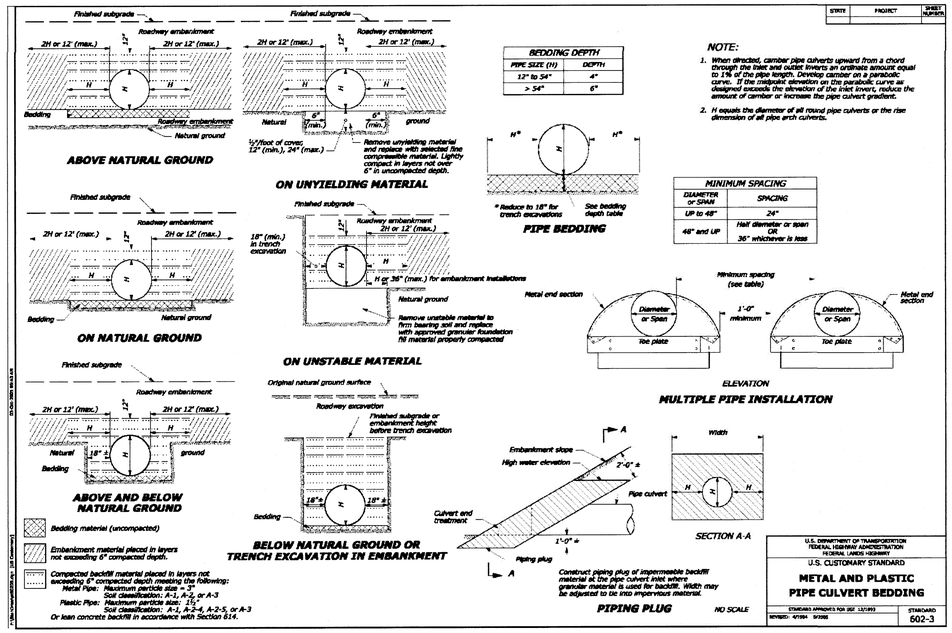

DETAIL 2
NTS –

DETAIL 3
NTS C-6

SAVED: 2/8/2016 11:31 AM CNEWELL PLOTTED: 2/8/2016 11:35 AM CHRIS D. NEWELL
\EurekaSVRNEW\Projects\CAD-FILES\Redding\2015\515018\515018-DETAILS-SRR.dwg

VERIFY SCALES
BAR IS ONE INCH ON ORIGINAL DRAWING
0 1"
IF NOT ONE INCH ON THIS SHEET, ADJUST SCALES ACCORDINGLY

SHN
CONSULTING ENGINEERS & GEOLOGISTS, INC.
350 HARTNELL AVENUE
REDDING, CA 96002
WWW.SHN-ENGR.COM
530-221-5424

NO.	DATE	REVISION	BY

DSGN DLY
DR DLY/NMD
CHK JSO
APVD

SUSANVILLE INDIAN RANCHERIA
SPRING RIDGE ROAD
SUSANVILLE, CALIFORNIA

CALTRANS STANDARD DETAILS & PIPE BEDDING DETAILS

SHEET C-11
SEQ 16
DATE 12/2015
PROJ. NO. 515018

REGISTERED PROFESSIONAL ENGINEER
ERIC ALLEN SCHNEIDER
No. 69219
Exp. 6/30/16
CIVIL
STATE OF CALIFORNIA
2-29-16